***Selah Planning Commission***
***Regular Meeting***
***Tuesday, May 17, 2016***
***5:30 p.m.***
*City Council Chambers*

***Chairman:***
*Commissioners:*

Willie Quinnell
Dillon Pendleton
Lisa Smith
Eric Miller
Carl Torkelson

CITY OF SELAH
115 West Naches Avenue
Selah, Washington 98942

City Planner:
Secretary:

Harmit Bedi
Caprise Groo

---

**AGENDA**

A. Call to Order - Chairman

B. Roll Call

C. Agenda Changes

D. Communications
1. Oral

This is a public meeting. If you wish to address the Commission concerning any matter that is not on the agenda, you may do so now. Please come forward to the podium, stating your name and address for the record. The Chairman reserves the right to place a time limit on each person asking to be heard.

2. Written - None

E. Approval of Minutes
1. March15, 2016

F. Public Hearings

1. Old Business - None
2. New Business – File 915.95.16.01 – New Singular Wireless PCS.LLC / AT& T / Ryka Consulting Notice of Application.

   i. Variance to allow the replacement of an existing 110'± communication tower with a new 101 foot tower; and
   ii. Adjustment to allow the reduction of 20 foot rear set back standard.

G. General Business
1. Old Business –
2. New Business-

H. Reports/Announcements
1. Chairman
2. Commissioners
3. Staff

I. Adjournment

Next Regular Meeting: To Be Announced

# City of Selah
**Planning Commission Minutes**
Of
March 15, 2016

Selah Council Chambers
115 W. Naches Ave.
Selah, Washington 98942

A. Call to Order

The meeting was called to order by Vice Chairman Smith at 5:37 p.m.

B. Roll Call

| | |
|---|---|
| Members Present: | Commissioners: Miller, Torkelson, Smith, and Pendleton. |
| Members Absent: | Commissioner Quinnell |
| Staff Present: | Tom Durant, Consultant, Don Wayman, City Administrator, Harmit Bedi, City Planner, Caprise Groo, Secretary |
| Guest: | Shawn Conrad, Senior Planner, Yakima Valley Conference of Governments |

C. Agenda Changes : None

D. Communications

1. Oral- Introduction of the City Planner- Harmit Bedi.

Vice Chairman Smith asked Mr. Bedi to introduce himself and to tell everyone where he was from.

Mr. Bedi introduced himself. He discussed where he was from, the interview process, the fact that he liked Mr. Wayman and that there were many projects.

2. Written- None

E. Approval of Minutes
1. February 16 , 2016

Commissioner Miller corrected an error on the minutes.

Commissioner Torkelson motioned to approve the minutes with the minor change.

Commissioner Miller seconded the motion.

Vice Chairman Smith called for a voice vote and the minutes were approved with a vote of 4-0.

F. Public Hearings

1. Old Business – None

2. New Business – File No. 915.95.16-01- New Cingular wireless PCS, LLC/AT&T Mobility/Ryka Consulting Notice of Application

Vice Chairman Smith turned the discussion over to Mr. Durant

Mr. Durant stated that while going over the site plan some issues arose that required a variance. He stated that it was recommended to open the hearing and then continue it until a later date.

Discussion ensued about the variance and what was required.

Vice Chairman Smith asked if anyone would like to comment on the tower going in.

No one came forward.

Mr. Durant stated that the discussion would be continued until a later date not yet specified.

G. General Business

1. Old Business – None

2. New Business- Study Session-YCOG Development Regulations and Critical Area Ordinance Update

Vice Chairman Smith turned the discussion over to Shawn Conrad.

Shawn Conrad, Yakima Valley Conference of Governments. She stated that this was the latest of the chapter's that were being updated for the GMA Periodic update. She explained that this was a study session and that a recommendation would be done when all the chapters are complete. She explained this study session would cover Title 10, title 21 and Chapter 11. She stated that there was a Staff Report for these chapters and only the sections highlighted in red had been changed. She then proceeded to go over the highlighted changes. (Staff Report and Draft documents attached)

Mrs. Conrad went over the first highlighted section.

Commissioner Miller asked if that was eminent domain.

Mrs. Conrad move to page 2, R-1, R-2 Manufactured homes.

Discussion ensued.

Mrs. Conrad moved on to page 6-7, Family Daycare providers.

Discussion ensued about the definition of Family Daycare providers and street pick up and drop off requirements.
Issues

Issues: Internal check list
Number of children
Drop off site
Facility size
State requirements

Mrs. Conrad stated she wanted to check the stated regulations and definition of Adult Family homes. She moved on to page 8 and then page 9.

Mr. Durant commented on page 9 and the changes to the Effect of approval of Preliminary Plats.

Mrs. Conrad moved on to page 10-12, the Proposed New section.

Discussion ensued.

Issues: Traffic
Level of Service
Pre-screening
Impact Threshold Determination

Mrs. Conrad moved on to definitions page 13-14. She stated that this section was for clarification.

Mr. Durant explained page 14 Manufactured homes.

Discussion ensued.

Issues: Manufactured Homes
Blue Homes
Traffic
Roads

Mrs. Conrad moved forward to the Critical Areas. She stated that the natural systems chapter had already been covered and would be protected by the Critical Areas Ordinance and best available science. She explained why something's would be removed and others added. She moved through the highlighted areas with no questions until page 24.

Mr. Wayman asked about the definition of wetlands.

Mrs. Conrad moved to page 24.

Mr. Durant explained the category of wetlands

Discussion ensued.

Issues Flexibility
Methods
Best Available Science

Mrs. Conrad moved to page 25, Wetland Mitigation. She stated she would like to add some definitions. She then moved on to page 26.

Mr. Durant explained the Geologically Hazardous Areas. He stated that this was vetted and stands up in court.

Mr. Wayman agreed it was needed.

Discussion ensued.

| | |
|---|---|
| Issues | Land Slides<br>Erosion<br>Storm Water Control<br>Retaining walls |

H. Reports/Announcements

1. Chairman- None
2. Commissioners- None
3. Staff-

Mr. Wayman discussed Volunteer Park, First Street and other projects around the City.

I. Adjournment

Commissioner Miller motioned to adjourn the meeting, Commissioner Torkelson seconded the motion. Vice Chairman Smith adjourned the meeting at 7:34 pm with a voice vote of 4-0.

_____

Vice Chairman

# STAFF REPORT

**TO:** Planning Commission, City of Selah

**FROM:** Shawn Conrad, Senior Planner, Yakima Valley Conference of Governments

**DATE:** March 15, 2016

**SUBJECT:** GMA Periodic Update: draft development regulations and Critical Areas Ordinance updates – Titles 10, 11, and 21 of the Selah Municipal Code

**ACTION REQUESTED:** None; review and discussion only.

## Background

The Growth Management Act (GMA) requires fully planning jurisdictions to review and update their comprehensive plans, development regulations, and critical areas ordinance, every eight years as established by RCW 36.70A.130(5)(c). Selah's next GMA periodic update is due June 30, 2017. After this date, without a completed update, Selah will be unable to access Washington State road and water/wastewater infrastructure grants and loans.

As part of this process, staff is reviewing and updating the current Selah development regulations, including the Selah Critical Areas Ordinance. Once the Comprehensive Plan review is completed, staff will continue reviewing and updating the Selah Comprehensive Plan. Once all reviews are completed, staff will request a recommendation from Planning Commission to City Council on all of the elements of the GMA Periodic Update, combined.

## Development Regulations Review and Update

Selah development regulations were reviewed to identify any revisions needed to maintain compliance with Growth Management Act provisions. Revisions are proposed for the following Selah Municipal Code (SMC) sections: Titles 10 (Zoning), Title 21 (Administrative Procedures), and Appendix A (Definitions). Proposed revisions are intended to ensure that Selah development regulations are compliance with the following GMA requirements:

- Avoiding unconstitutional taking of private property
- Permitting family day care centers in residentially-zoned areas
- Siting manufactured homes in the same manner as site-built homes
- Providing for early and continuous public participation
- Providing for consideration of safe walking conditions
- Providing for transportation concurrency review
- Updating definitions to reflect the above.

## Critical Areas Ordinance

The current Selah Critical Areas Ordinance (CAO), SMC Chapter 11.50, was adopted April 8, 2014 as part of the City's previous GMA update cycle. As part of the current GMA update cycle, the CAO was reviewed and updates proposed. Most of the proposed updates relate to aligning

the CAO with current guidance regarding critical areas, and providing clarification. Major proposed revisions include:

- Adding or modifying definitions for clarification
- Modifying exemptions and exceptions to make regionally consistent
- Updating critical areas mapping discussions to better reflect map sources, purpose, and intent
- Updating performance standards for critical aquifer recharge areas to align with current guidance
- Updating wetlands performance standards, definitions, and classification to align with current guidance
- Modifying geologically hazardous areas review process to better reflect local needs.

**Selah Municipal Code Development Regulations – Proposed GMA Updates**
**March 2016**

**Underline = text proposed for addition**
**Strikethrough = text proposed for deletion**

# TITLE 10 - ZONING

## Chapter 10.02 - GENERAL PROVISIONS

### 10.02.030 - Purpose.

The controls set forth in Title 10 are deemed necessary in order to:

Implement the city of Selah Urban Growth Area Comprehensive Plan enacted pursuant to the Washington State Growth Management Act;

Assure the orderly development of the city consistent with the Selah Urban Growth Area Comprehensive Plan goals and policies;

Provide regulatory and administrative actions that do not result in an unconstitutional taking of private property;

Encourage orderly growth while integrating new development and redevelopment into the fabric of the community while maintaining a high quality environment;

Encourage the most appropriate use of the land;

Regulate lot coverage, population density and distribution, and the location and height of structures;

Provide adequate light, air, sanitation, and drainage;

Protect the social and economic stability of resources and lands within the city;

Reduce the menace to the public safety resulting from the improper location of homes, commerce and industry in a single area; and

Otherwise promote the public health, safety and general welfare.

## Chapter 10.08 - GENERAL ZONING DISTRICT REGULATIONS

### 10.08.140 - Manufactured home siting requirements.

The provisions established herein are intended to assure the siting of manufactured homes in mobile/manufactured home parks, manufactured home subdivisions and on individual lots in the

LDSF, R-1, R-2, zoning district are compatible with surrounding uses and preserves the general character and integrity of the mobile/manufactured park, manufactured home subdivision and/or adjacent residential uses. In addition to the specific regulations set forth in the LDSF use district the following regulations shall apply to the placement of manufactured homes:

(1) All manufactured homes shall:

(A) Have permanent steps or inclined planes affixed to all entrances;

(B) Maintain a minimum eighteen inch crawl space under the entire unit;

(C) Have permanent skirting or side walls installed to enclose all areas between the lower edge of the outside walls and the ground;

(D) Be placed and anchored per the manufacturer's installation instructions or per the design of a professional engineer or architect licensed in Washington [WAC 296-150M-610(1)(C)], except in flood prone areas placement and anchoring shall be in accordance with the provisions of Title 11, Chapter 11.19, Appendix A;

(E) Have the tow tongue and axles removed.

(2) Manufactured homes located in manufactured home subdivisions or on individual lots in the LDSF zoning district shall also be required to meet the four siting requirements listed below:

(A) Roof Slope. Roof slope shall be not less than a two feet rise for each twelve feet of horizontal run.

(B) Roofing Materials. Roofing materials shall be compatible in appearance with surrounding site-built homes, and consistent with fire safety standards.

(C) Siding Materials. Siding materials shall be wood, masonite, or other material compatible with surrounding site-built homes.

(D) Pit Set. Manufactured homes shall be "pit set," with the bottom of the floor joist or frame no more than twelve inches above finished grade, except as necessary to accommodate terrain. The pit shall be of sufficient depth to accommodate an eighteen inch clearance below the frame of the unit with crawl space access located near utility connections.

## Chapter 10.28 - PERMITTED, ADMINISTRATIVE AND CONDITIONAL USES

### 10.28.040 - Regulatory notes.

The following regulatory notes correspond to the uses listed in Chapter 10.28, Table A:

(a) Structures used to house livestock or other farm animals. In the low density single-family (LDSF) and the one-family residential (R-1) zoning districts, no portion of any structure used to house livestock or other farm animals shall be located within one hundred feet of any residence, other than the dwelling on the same lot.

(b) Agricultural stands for the sale of agricultural products, excepting livestock, provided they:

(1) Are a seasonal operation;

(2) Have sufficient area to allow automobiles to park safely off the road right-of-way and to re-enter the traffic in a forward direction;

(3) Less than one thousand square feet in area;

(4)Limit sales to agricultural produce and to incidental related products. (See definition in Title 10, Appendix A)

(c) Campgrounds and recreational vehicle parks, as defined in Title 10, Appendix A, shall be subject to approval of a binding site plan of the same nature required for manufactured home parks (See Chapter 10.26) except that alternate buffer requirements may be considered when consistent with the character of the area in which the facility is proposed. Review and conditioning of the proposal shall generally follow the requirements for manufactured home parks, as appropriate.

(d) Outdoor commercial amusements, as defined in Title 10, Appendix A, shall be subject to the following requirements:

(1) Access to such uses shall be only from full width roads, which shall be paved or surfaced in accordance with specifications approved by the director of public works.

(2) Parking areas for permanent outdoor commercial amusements shall be paved to eliminate dust or mud.

(e) Manufactured home parks, as defined in Title 10, Appendix A, shall have a maximum density consistent with the comprehensive plan future land use map designation.

(f) The first floor of mixed (residential and commercial) use along the street frontage must be used for commercial uses. Dwelling units may be located above the first floor or to the back of the building. The proposal must be served by a municipal water supply and sewage disposal system. The mixed use shall provide sufficient off-street parking to accommodate the mixed uses in accordance with Chapter 10.34

(g) Bed and breakfast inns, as defined in Title 10, Appendix A, shall be subject to the following requirements:

(1) Bed and breakfast inns may only be permitted within the low density single-family (LDSF), one-family residential (R-1), professional business (B-1) and general business (B-2) zoning districts when established within an existing single-family residence.

(2) Bed and breakfast inns shall meet all applicable health, fire safety and building codes and, within residential zones, shall be operated so as not to give the appearance of being a business and the inn shall not infringe upon the rights of neighboring residents to peaceful occupancy of their homes. Minimal outward modifications of the structure or grounds may be made only if such changes are compatible with the character of the area or the neighborhood.

(3) Bed and breakfast inns shall be considered to be single-family residences, whether occupied and operated by the owner or by a hired manager. No additional dwelling shall be placed on the same lot as the bed and breakfast inn unless as otherwise permitted by this title.

(4) Meals shall only be served to guests taking lodging in the inn, even if the inn is required to be licensed as a restaurant under state regulations.

(5) The number of guestrooms shall not exceed five.

(6) One off-street parking space per guestroom shall be provided. In residential zones the front yard area shall not be used for off-street parking for bed and breakfast guests unless the parking area is screened and found to be compatible with the neighborhood.

(7) One non-illuminated or externally illuminated sign not to exceed the maximum size allowed within the zoning district in which located and bearing only the name of the inn and/or the operator shall be permitted.

(8) The administrative official may authorize use of the bed and breakfast inn for receptions, group meetings and special gatherings based upon the size of the inn, availability of adequate off-street parking space, access, public health considerations and compatibility with the surrounding neighborhood. Food may be served under these circumstances.

(9) Any commercial uses, such as gift stores, art galleries or the like, that are associated with or housed within the inn shall be subject to separate application, if listed as a Class 1, II, or III use in the underlying zoning district.

(h) Communication towers, as defined in Title 10, Appendix A, shall be subject to the following requirements:

(1) The facility shall use state-of-the-art technology to reduce visual impact;

(2) At a minimum the facility shall be camouflaged to industry standards;

(3) Preferential consideration will be given to facilities which co-locate on existing towers, buildings, and structures without an increase in the tower, building, or structure height;

(4) Communication towers exceeding the zoning district height limitations established in Section 10.08.050 shall require a variance approval;

(5) Communication towers shall meet the principal structure setback standards established in Section 10.08.090, Table 8-3. Communication equipment buildings shall meet the accessory setback standards established in Section 10.08.090, Table 8-4.

(i) Home occupations are classified as two distinct types: (1) minor and (2) major as defined in Title 10, Appendix A. The intent of home occupations is to permit the resident(s) of a dwelling to conduct a business within the dwelling while limiting the impacts of the business on adjacent properties and the immediate residential neighborhood. Minor and major home occupations shall be subject to the following:

(1) Minor home occupations are limited to those occupations which are conducted within a dwelling and/or an on-site accessory building; the only employees are members of the family residing in the dwelling; there is no customer traffic to the dwelling; and the home occupation excludes all manufacturing, assembly and/or repair operations.

(A) There shall be no exterior evidence of the home occupation other than a permitted sign that would cause the premises to differ from its existing residential character: (e.g., outward physical appearance; lighting; the generation/emission of noise, fumes, or vibrations as determined by the administrative official using normal senses or create any visible or audible interference in radio or television reception or cause fluctuations in electrical line voltage serving the dwelling).

(2) Major home occupations are limited to those occupations which are conducted within a dwelling and/or an on-site accessory building by members of the family residing in the dwelling; may include non-resident employees; may attract customer traffic to the dwelling; and may include on-site services, sales, manufacturing, assembly and/or repair operations.

(A) There shall be no exterior evidence of the home occupation (e.g., outside storage of materials, equipment, supplies, or the display of goods or equipment) other than the following:

(i) A permitted sign;

(ii) One commercial vehicle as it pertains to the home occupation;

(iii) Employee and customer parking which shall be provided off-street in a location other than within the required front yard setback.

(j) All canines in kennels, as defined in Title 10, Appendix A, and veterinary clinics shall be provided with indoor sleeping areas, in order to minimize nighttime noise impacts to neighboring properties.

(k) Mini storage facilities, as defined in Title 10, Appendix A, shall be subject to the following minimum requirements:

(1) The site is contiguous to a designated arterial or collector. Ingress and egress to the facility is directly onto such arterial or collector;

(2) Along all property lines abutting a residential district a six foot high, site obscuring, decorative fence or wall shall be installed and maintained;

(3) The facility is used exclusively for storage of personal property and/or recreational vehicles with no commercial storage or commercial sales authorized.

(l) Family Daycare providers, as defined in Title 10, Appendix A, are allowed in areas zoned for residential of commercial uses. Zoning restrictions should be no more restrictive than those imposed on other residential dwellings in the same zone, but may address drop-off and pickup areas and hours of operation.

(m) Manufactured Housing. Manufactured homes, as defined in Title 10, Appendix A, are allowed to be sited in the same manner as site built homes, factory built homes, or homes built to any other state construction or local design standard.

City may require that:
(a) A manufactured home be a new manufactured home;
(b) The manufactured home be set upon a permanent foundation, as specified by the manufacturer, and that the space from the bottom of the home to the ground be enclosed by concrete or an approved concrete product which can be either load bearing or decorative;
(c) The manufactured home comply with all local design standards applicable to all other homes within the neighborhood in which the manufactured home is to be located;
(d) The home is thermally equivalent to the state energy code; and
(e) The manufactured home otherwise meets all other requirements for a designated manufactured home as defined in RCW 35.63.160.

(Ord. 1634 § 103, 2004.)

| **City Of Selah Zoning Ordinance, Title 10, Chapter 28, Table A-5** | | | | | | | |
|---|---|---|---|---|---|---|---|
| Permitted Uses By Zoning District | LDSF | R-1 | R-2 | R-3 | B-1 | B-2 | M-1 |
| Residential | | | | | | | |
| Accessory structure, use or building* | 1 | 1 | 1 | 1 | 1 | 1 | 1 |
| Detached single-family dwelling* | 1 | 1 | 1 | | | | |

| | | | | | | | |
|---|---|---|---|---|---|---|---|
| Manufactured home*/ Mobile home* (See 10.08.140 | 1 | 1 | 1 | | | | |
| Two-family dwelling (duplex) * | | | 1 | 1 | | | |
| Multiple family dwelling*: | | | | | | | |
| 0—5 DUA | | | 2 | 1 | | | |
| <6-12 DUA | | | 2 | 1 | | | |
| >12 DUA | | | | 1 | | | |
| Manufactured home parks* (See 10.28.040[e]) | | | | 3 | | | |
| Retirement apartments | | | 2 | 1 | | | |
| Home occupations* (See 10.28.040[i]) | | | | | | | |
| Minor Home Occupations* (See 10.28.040[i]) | 1 | 1 | 1 | 1 | 1 | 1 | |
| Major Home Occupations* (See 10.28.040[i]) | 2 | 2 | 2 | 2 | 2 | 1 | |

| City Of Selah Zoning Ordinance, Title 10, Chapter 28, Table A-2 | | | | | | | |
|---|---|---|---|---|---|---|---|
| Permitted Uses By Zoning District | LDSF | R-1 | R-2 | R-3 | B-1 | B-2 | M-1 |
| **Community Services** | | | | | | | |
| Cemetery, Mausoleums and Columbarlums | 3 | 3 | | | | | |
| Churches, Synagogues, Temples | 3 | 3 | 3 | 1 | 1 | 1 | |
| Community Center, Meeting Halls, Fraternal Organizations* | | | | 1 | 1 | 1 | |
| Convalescent and Nursing Home* | | | | 1 | 1 | 1 | |
| ~~Child/Adult Daycare Facilities~~Family Daycare Providers*: (more than six but fewer than thirteen children or adults) | ~~2~~1 | ~~2~~1 | ~~2~~1 | ~~2~~1 | ~~3~~1 | ~~3~~1 | |
| Child/Adult Daycare Center*: (more than twelve children or adults) | 3 | 3 | 3 | 3 | 3 | 3 | |
| Ambulance services | | | | | 1 | 1 | |
| Funeral homes | | | | | 1 | 1 | |
| Group homes* | 2 | 2 | 2 | 2 | 2 | | |
| Halfway house* | | | 3 | 3 | 3 | 3 | |
| Hospitals* | | | | | | 1 | |
| Correction facilities | | | | | | 3 | |
| Libraries, Museums, Art galleries | | | | | 1 | 1 | |

| City Of Selah Zoning Ordinance, Title 10, Chapter 28, Table A-2 | | | | | | | |
|---|---|---|---|---|---|---|---|
| Permitted Uses By Zoning District | LDSF | R-1 | R-2 | R-3 | B-1 | B-2 | M-1 |
| Municipal buildings (fire and police stations, city hall, municipal maintenance facilities, other municipal buildings) | 3 | 3 | 3 | 3 | 3 | 1 | 1 |
| Schools: Elementary, Middle, Intermediate and High Schools* | 3 | 3 | 3 | 3 | 3 | 3 | |
| Business and Vocation*, Community colleges | | | | | 2 | 2 | |
| Waste water lagoon and/or sprayfield | 3 | | | | | | 3 |

| City Of Selah Zoning Ordinance, Title 10, Chapter 28, Table A-11 | | | | | | | |
|---|---|---|---|---|---|---|---|
| Permitted Uses By Zoning District | LDSF | R-1 | R-2 | R-3 | B-1 | B-2 | M-1 |
| Utilities | | | | | | | |
| Electric Vehicle Batter Charging Station* | | | | | 1 | 1 | 1 |
| Communication towers* (See 10.28.040[h]) | 3 | 3 | 3 | 3 | 3 | 3 | 3 |
| Refuse transfer station | | | | | | | 3 |
| Sewage treatment plants, wastewater lagoons and sprayfields, and bio-solid composting | | | | | | | 3 |
| Utility substations (electric, telephone, gas, etc.) | 3 | 3 | 3 | 3 | 3 | 3 | 3 |
| Water reservoirs | 3 | 3 | 3 | 3 | 3 | 3 | 3 |
| Pumping stations | 3 | 3 | 3 | 3 | 1 | 1 | 1 |
| Wholesale Trade-Storage | | | | | | | |
| Self Service or mini storage* (See 10.28.040[k]) | | | | | | 1 | |
| Warehouses* and storage facilities | | | | | | 2 | 1 |
| Wholesale trade | | | | | | 2 | 1 |

## Chapter 10.40 – AMENDMENTS

### 10.40.010 - Purpose.

From time to time a change in circumstances or conditions may warrant a change in the zoning text or map created by this title. The purpose of this chapter is to allow for early and continuous public participation by establishing the procedures to amend the zoning text and/or map when the

proposed change would be consistent with the goals, objectives and policies of the comprehensive plan and intent of this title.

## Chapter 10.50 - PLATTING AND SUBDIVISION REGULATIONS

### 10.50.032 - Council consideration.

At either the public meeting or public hearing the council shall determine whether the public interest would be served by approving the preliminary plat. It shall determine if appropriate provisions are made in the subdivision for, but not limited to, ~~drainage ways,~~ streets or roads, sidewalks, alleys, other public ways, transit stops, and other features that assure safe walking conditions for students; potable water supplies, sanitary wastes, and drainage ways (stormwater retention and detention);~~,~~ open spaces, parks and recreation, and playgrounds, sites for schools and school grounds, and shall consider all other relevant facts and determine whether the public interest will be served by the subdivision and dedication. If it finds that the plat makes appropriate provisions for the above, then the preliminary plat shall be approved.

### 10.50.033 - Effect of approval of preliminary plat.

(a) Approval of the preliminary plat by city council shall constitute authorization for the subdivider to proceed with developing the subdivision facilities in accordance with the standards and procedures established in this chapter, adopted by reference and including any conditions imposed by city council.

(b) The subdivider shall comply with the timeline below ~~have five years~~ from the date of preliminary plat approval by city council to complete all improvements within the area of the preliminary plat and to comply with all conditions that may have been imposed by the council.

1) Seven years if the date of preliminary plat approval is on or before December 31, 2014

2) Five years if the preliminary plat approval is issued on or after January 1, 2015

3) Nine years if the project is located within city limits, not subject to the shoreline management act, and the preliminary plat is approved on or before December 31, 2007.

(c) If the subdivider is unable to complete the improvements within the prescribed ~~five year~~ period of time as designated in SMC 10.50.033(b), the subdivider may, prior to the expiration of the ~~five year~~time completion period, apply to the city council for a one-time extension, limited in length to a maximum period of twelve months, to record the final plat. Council may grant such extension only upon evidence that the applicant has made a good faith effort to complete the required facilities within the ~~five year~~time period and that failure to complete the required facilities was due to circumstances beyond his/her control. If a preliminary plat approval is subjected to judicial review the five year period will commence at the conclusion of such judicial review.

# Proposed New Section

## X.X.XXX Transportation Concurrency Review

A. Purpose. This section sets forth specific standards providing for compliance with the concurrency requirements of the State Growth Management Act (GMA) and for consistency between Selah and Countywide Planning Policies under the GMA. The GMA requires that the City of Selah "must adopt and enforce ordinances which prohibit development approval if the development causes the level-of-service on a transportation facility to decline below the standards adopted in the transportation element of the Comprehensive Plan, unless transportation improvements or strategies to accommodate the impacts of development are made concurrent with the development." (RCW 36.70A.070).

B. Exemptions. The following shall be exempt from the provisions of this chapter:
   1. Development permits issued prior to the effective date of the ordinance codified in this chapter provided the permit or permits have not expired;
   2. De minimis development, herein defined as ~~single-family dwellings and~~ any proposed development generating less than 90 vehicular trips per day;
   3. Public libraries, parks, and recreational facilities;
   4. Publicly funded educational facilities;
   5. Construction of public transportation facilities;
   6. Highways of statewide significance, as designated by the Washington State Department of Transportation; and
   7. Road or street projects undertaken by the city.

C. Level of service standards. For the purpose of this section, level of service (LOS) for transportation facilities shall be D for principal arterials and C for minor arterials, collectors and local access roads, as set forth within the transportation element of the City of Selah Comprehensive Plan and are hereby adopted by reference.

D. Review process. The ~~Town~~ City shall utilize the following procedures for evaluating all projects or development activities for concurrency, unless the applicant otherwise noted in writing:
   1. Certificate of Concurrency.
      a. The ~~mayor~~, Public Works Director or designee, shall complete a transportation concurrency evaluation at the time a development permit is applied for or during the course of permit review. The review shall conclude with a determination that the proposed project meets the level of service standards whereby a certificate of concurrency shall be issued and attached or incorporated to the development permit approval. When a project is determined to have not met level of service standards, the certificate of concurrency shall be conditioned in a manner that satisfies the requirements of this chapter, or the project shall not be approved.

b. The applicant shall provide the city with all information necessary to complete the concurrency evaluation on the proposed development. It shall be the responsibility of the applicant to provide studies, surveys, traffic counts, engineering review or any other items determined to be necessary for an accurate concurrency evaluation.

c. A certificate of concurrency shall be accorded the same terms and conditions as those for the underlying development permit. If a development permit timeline is extended the certificate shall also be extended for the same time duration. A certificate of concurrency shall be valid only for the development permit approved for the same parcel and may be transferable to any new owner(s) of the parcel to which it was issued.

2. Traffic Impact Calculations.

a. Trip Generation. Traffic calculations shall be based on the trip generation average described within the latest available edition of the Institute of Transportation Engineers (ITE) trip generation manual for the particular type and extent of the development being proposed.

b. Concurrency Test. The projected number of trips generated by a proposed development shall be subtracted from existing or new transportation capacity of the impacted transportation facility. If projected demand is less than available capacity, the project is not adverse to level of service standards and shall be issued a certificate of concurrency.

E. Transportation concurrency mitigation methods. The city shall use the following procedures and criteria to review and approve the adequacy of mitigation methods unless the applicant is otherwise noted in writing:

1. If mitigation is determined necessary to maintain level of service standards for an impacted transportation facility, the applicant may choose among the following actions:

a. Reduce the size of the project until levels of service standards are met;

b. Enter into a legally binding development agreement with the ~~Town~~ City whereby all required improvements will be constructed and completed within six years of the development approval date which also ensures that the financing is available to pay for the improvements at time of building permit approval;

c. Be subject to a development approval conditioned that the required improvements be completed prior to the issuance of building permits, final plat or site plan approvals associated with the development;

d. Propose transportation demand management strategies to reduce vehicle trips generated by the project development;

e. At the City's discretion, await the City's completion of mitigating improvements if such improvements are underway or planned as part of the City's six-year transportation improvement plan; or

f. Any combination of the above.

2. Acceptable impact mitigation requires a finding of the following:
   a. The mitigation contributes to transportation facility performance and established level of service standards;
   b. The mitigation is consistent with the Comprehensive Plan;
   c. Any improvements to an intersection or roadway do not shift traffic to residential areas or to other intersections where there is no mitigation being proposed;
   d. Any adverse environmental impacts of the facility improvements may be reasonably minimized or eliminated; and
   e. The improvements are consistent with established engineering standards.

# Title 21 - ADMINISTRATIVE PROCEDURES

## Chapter 21.09 - REVIEW AND APPROVAL PROCESS

### 21.01.040 - Definitions.

The following definitions shall apply to this title. Additional definitions may be found in individual titles of the S.M.C.

"Essential public facilities" include those facilities that are typically difficult to site, such as airports, state education facilities and state or regional transportation facilities as defined in RCW 47.06.140, regional transit authority facilities as defined in RCW 81.112.020, state and local correctional facilities, solid waste handling facilities, and inpatient facilities including substance abuse facilities, mental health facilities, group homes, and secure community transition facilities as defined in RCW 71.09.020.

### 21.09.080 - Final decision.

(a) Time. The final decision on a development proposal shall be made within one hundred twenty days from the date of the letter of completeness. Exceptions to this include:

(1) Amendments to the comprehensive plan or city's municipal code.

(2) Any time required to correct plans, perform studies or provide additional information, provided that within fourteen days of receiving the requested additional information, the administrator shall determine whether the information is adequate to resume the project review.

(3) Substantial project revisions made or requested by an applicant, in which case the one hundred twenty days will be calculated from the time that the city determines the revised application to be complete.

(4) All time required for the preparation and review of an environmental impact statement.

(5) Projects involving the siting of an essential public facility, as defined in SMC 21.01.040 and in accordance with RCW 36.70A.200(5) and WAC 365-196-550.~~.~~

(6) An extension of time mutually agreed upon by the city and the applicant.

(7) All time required to obtain a variance.

(8) Any remand to the hearing body.

(9) All time required for the administrative appeal of a determination of significance (DS).

(b) Effective Date. The final decision of the council or hearing body shall be effective on the date stated in the decision, motion, resolution, or ordinance, provided that the date from which appeal periods shall be calculated shall be the date the council or hearing body takes action on the motion, resolution, or ordinance.

# Appendix A – Definitions

"Dwelling" means a building, structure or portion thereof designed exclusively for residential purposes, including residential use and occupancy by persons with handicaps.

"Electric Vehicle Battery charging station" means an electrical component assembly or cluster of component assemblies designed specifically to charge batteries within electric vehicles, which meet or exceed any standards, codes, and regulations set forth by chapter 19.28 RCW and consistent with rules adopted under RCW 19.27.540.

"Family" means an individual, or two or more persons related by blood, marriage or adoption or a group of not more than five persons, excluding servants, who are not related by blood, marriage or adoption, living together in a dwelling unit.

"Family home services" means and includes the following:

(1) "Adult daycare home" means a regular family abode of a person or persons providing personal care, or special care for less than twenty-four hours to more than one but not more than six adults who are not related by blood or marriage to the person(s) providing the services.

(2) "Adult family home" means a regular family abode of a person or persons providing personal care, or special care, room, and board to more than one but not more than six adults who are not related by blood or marriage to the person(s) providing the services.

(3) "Family Daycare ~~Home, Child~~Providers"~~. "Child family daycare home"~~ means a licensed child ~~day~~care provider who regularly provides early childhood education and

early learning services~~facility in the family residence of a state licensee providing regularly scheduled child daycare~~, for less than twenty-four hours, for not more than twelve children in the family living quarters, including children who reside at the home.

~~(3)~~(4) "Foster family home" means a dwelling unit in which foster care is provided on a twenty-four hour basis for not more than six unrelated children, expectant mothers or persons with developmental disabilities in the family abode of the person or persons under whose direct care and supervision the child, expectant mother or disabled person is placed as part of the family, and the dwelling unit is governed by the state foster care home licensing provisions and conducted in accordance with state requirements.

~~(4)~~(5) Group Care Facility, Small. "Small group care facility" means a facility for handicapped, physically disabled or developmentally disabled adults, or dependent or pre-delinquent children, plus house parents, providing facilities residentially oriented in a home-like environment directed to allow a degree of community participation and human dignity not provided in an institutional atmosphere for only six or fewer such persons, plus house parents. Does not include "halfway house."

~~(5)~~(6) "Halfway house" means a home for juvenile delinquents, adult offenders, those leaving correctional and/or mental institutions, or a rehabilitation center for alcohol and/or drug users providing residentially oriented facilities which allow rehabilitation or social adjustment for persons who are in need for supervision or assistance in becoming socially reoriented but not in need of institutional care. Such facility provides a reintroduction of residents into a normal community life by providing a stable living situation rather than incarceration or a reintroduction without home, job or social reinforcement. Does not include a state licensed crisis residential facility as that term is used by statute.

~~(6)~~(7) Licensed Boarding Home, Small. "Small licensed boarding home" means any home or other institution however named which is advertised, announced or maintained for the express or implied purpose of providing domiciliary assisted living services and enhanced adult residential care to three to six aged persons not related by blood or marriage.

(8) "Safe/shelter home" means a place of temporary refuge (e.g. shelter) which includes access to adequate food and clothing offered on a twenty-four hour, seven day-per-week basis to victims of domestic violence and their children. A safe home is a component of or has a working agreement with a domestic violence service for up to two lodging units. A shelter home includes three or more lodging units.

"Manufactured home, new" as defined by RCW 35.63.160(2) means any manufactured home required to be title under Title 46 RCW, which has not been previously titled to a retail purchaser, and is not a "used mobile home" as defined in RCW 82.45.032(2).

# Chapter 11.50 - CRITICAL AREA ORDINANCE

## Proposed GMA Updates, March 2016

**Underline = text proposed for addition**
**Strikethrough = text proposed for deletion**
**Sections:**

FOOTNOTE(S):

--- (3) ---

**Editor's note—** Ord. No. 11.50, § 2, adopted April 8, 2014, set out provisions intended for use as Chapter 11.50. For purposes of classification and at the city's direction, these provisions have been included as Chapter 11.50

11.50.010 - Purpose and intent.

The purpose of this chapter is to designate and classify ecologically sensitive and hazardous areas and to protect these areas and their functions and values in a manner that also allows reasonable use of private property. This section is intended to:

(1) Implement the city of Selah comprehensive land use plan and the requirements of the Growth Management Act;

(2) Protect critical areas, in accordance with the Growth Management Act and through the application of best available science, as determined according to WAC 365-195-900 through 365-195-925 as it exists or may hereafter be amended, and in consultation with state and federal agencies and other qualified professionals;

(3) Protect the general public, resources and facilities from injury, loss of life, property damage or financial loss due to flooding, landslides, or steep slopes failure;

(4) Protect unique, fragile and valuable elements of the environment, including ground and surface waters, wetlands, and fish and wildlife and their habitats;

(5) Prevent cumulative adverse environmental impacts to water quality and availability, wetlands, and fish and wildlife habitat;

(6) Provide flexibility and attention to site-specific characteristics, so as to ensure reasonable use of the property;

(7) Preserve development options within designated critical areas where such development will not adversely impact critical areas values and functions, particularly the functional properties of stream corridors and other hydrological related critical areas.

(Ord. No. 1943, § 2, 4-8-14)

11.50.020 - General provisions.

(a) The city of Selah contains areas that can be identified and characterized as critical or environmentally sensitive. Such areas within the city include aquifer recharge areas, fish and wildlife habitat areas, wetlands and streams, flood hazard areas, and geologic hazard areas.

(b) The city finds that these critical areas perform a variety of valuable and beneficial biological and physical functions that benefit the city and its residents. Alteration of certain critical areas may also pose a threat to public safety or to public and private property or the environment. The city therefore finds that identification, regulation and protection of critical areas are necessary to protect the public health, safety and general welfare. The city further finds that the functions of critical areas and the purpose of these regulations include the following:

(1) Wetlands. Wetlands perform a variety of functions that include maintaining water quality; storing and conveying stormwater and floodwater; recharging groundwater; providing important fish and wildlife habitat; and serving as areas for recreation, education and scientific study, and aesthetic appreciation.

Wetland buffers serve to moderate runoff volumes and flow rates; reduce sediment, chemical nutrient and toxic pollutants; provide shading to maintain desirable water temperatures; provide habitat for wildlife; and protect wetland resources from harmful intrusion.

The primary goals of wetland protection are to avoid adverse wetland impacts; to achieve no net loss of wetland function and value — acreage may also be considered in achieving the overall goal; to provide levels of protection that reflect the sensitivity of individual wetlands and the intensity of proposed land uses; and to restore and/or enhance existing wetlands, where possible.

(2) Streams. Streams and their associated riparian corridors provide important fish and wildlife habitat; help to maintain water quality; store and convey stormwater and floodwater; recharge groundwater; and serve as areas for recreation, education and scientific study and aesthetic appreciation. Stream buffers serve to moderate runoff volumes and flow rates; reduce sediment, chemical nutrient and toxic pollutants; provide shading to maintain desirable water temperatures; provide habitat for wildlife; and protect wetland resources from harmful intrusion.

The primary goals of stream protection are to avoid adverse impacts to streams and associated riparian corridors; to achieve no net loss of functions and values of the larger ecosystem in which the stream is located; to protect fish and wildlife resources; to protect water quality through appropriate management techniques; and, where possible, to provide for stream enhancement and rehabilitation.

(3) Fish and Wildlife Habitat. Fish and wildlife habitat areas provide opportunities for food, cover, nesting, breeding and movement for fish and wildlife, maintain and promote diversity of species and habitat; coordinate habitat protection with elements of the open space system; help to maintain air and water quality; help control erosion; serve as areas for recreation, education, scientific study, and aesthetic appreciation; and provide neighborhood separation and visual diversity within urban areas.

The primary goals of fish and wildlife habitat protection are to avoid adverse impacts to critical habitats for fish and wildlife; to achieve no net loss of functions and values of the larger ecosystem in which the fish and wildlife habitat is located; to implement the goals of the Endangered Species Act; to promote connectivity between habitat areas to allow for wildlife movement; to provide multi-purpose open space corridors; and, where possible, to provide for fish and wildlife enhancement and rehabilitation that reflects the sensitivity of the species.

(4) Aquifer Recharge Areas. Aquifer recharge areas provide a source of potable water and contribute to stream discharge/flow. Such areas contribute to the recharge of aquifers, springs and/or wells and are susceptible to contamination of water supplies through infiltration of pollutants through the soil.

The primary goals of aquifer recharge protections are to protect groundwater quality by maintaining the quality of recharge, avoiding or limiting land use activities that pose potential risk of aquifer contamination; and to minimize or avoid adverse impacts to aquifer recharge areas through the application of performance standards, and to comply with the requirements of the Federal Safe Drinking Water Act and Washington Administrative Code that requires Group A public water systems to develop and implement a wellhead protection program.

(5) Flood Hazard Areas. Floodplains help to store and convey stormwater and floodwater; recharge groundwater; provide important areas for riparian habitat; and serve as areas for recreation, education, scientific study. Development within floodplain areas can be hazardous to those inhabiting such development, and those living upstream and downstream. Floods also cause substantial damage to public and private property which can result in significant costs to the public and individuals.

The primary goals of flood hazard protections are to limit or condition development within the one hundred-year floodplain to avoid substantial risk of damage to public and private property and that result in significant costs to the public and individuals; to avoid significant increases in peak stormwater flows or loss of flood storage capacity.

(6) Geologic Hazard Areas. Geologic hazard areas include lands or areas characterized by geologic, hydrologic and topographic conditions that render them susceptible to varying degrees of risk of landslides, erosion, seismic or volcanic activity.

The primary goals of regulating geologic hazards are to avoid and minimize potential impacts to life and property by regulating and/or limiting land uses where necessary, and to conduct appropriate levels of analysis and ensure sound engineering and construction practices to address identified hazards.

(7) This chapter of the Selah Municipal Code and other sections incorporated by reference contain standards, procedures, criteria and requirements intended to identify, analyze, and mitigate potential impacts to the city's critical areas, and to enhance and restore degraded resources where possible. The general intent of these protections is to avoid impacts to critical areas. In appropriate circumstances, impacts to specified critical areas resulting from regulated activities may be minimized, rectified, reduced and/or compensated for, consistent with the requirements of this chapter.

(Ord. No. 1943, § 2, 4-8-14)

11.50.030 - Definitions.

For purposes of this chapter, the following definitions for terms, phrases, words and their derivatives used in this chapter shall apply. Where any of these definitions conflict with definitions used in other chapters of the municipal code the definitions in this chapter shall prevail for the purpose of this chapter. Where terms are not defined they shall have the ordinary accepted meaning within the context with which they are used. Where an activity or land use could fall under two or more definitions the more specific shall apply. Webster's Third New International, 1993 (unabridged), shall be the source for ordinary accepted meaning and for the definition of words not defined in this chapter. Specific examples are included as illustrations but are not intended to restrict a more general definition:

**A**

"Agriculture" and "farming" shall include cultivation of the soil, raising or harvesting any agricultural or horticultural commodity or the construction, operation or maintenance of ditches, canals, reservoirs or waterways used exclusively for farming purposes; handling, planting, drying, packing, packaging, processing, freezing, grading, storing or delivering to storage or to market, or to a carrier for transportation to market, or for direct sale any agricultural or horticultural commodity as an incident to ordinary farming operations, or, in the case of fruits and vegetables, as an incident to the preparation of such fruits and vegetables for market or for direct sale.

"Anadromous fish" means fish that spawn and rear in freshwater and mature in the marine environment, such as salmon, steelhead, sea-run cutthroat, and bull trout.

"Applicant" means a person, party, firm, corporation, or other legal entity that proposes, has performed an activity, or submits an application for any permit or approval required by this title and who is the owner of the subject property or the authorized agent of the owner.

"Aquifer" means, generally, any water bearing soil or rock unit. Specifically, a body of soil or rock that contains sufficient saturated permeable material to conduct groundwater and yield significant quantities of groundwater to wells or springs.

"Aquifer recharge areas" means land areas designated by the city beneath which groundwater occurs that is a current or potential future source of drinking water for the city.

"Artificially created wetlands" means wetlands created from nonwetland sites through purposeful, legally authorized human action, such as irrigation and drainage ditches, grass-lined swales, canals, retention and detention facilities, wastewater treatment facilities, farm ponds, and landscape amenities.

**B**

"Best available science" means as defined in the procedural criteria for adopting comprehensive plans and development regulations for best available science at WAC 365-195-900 et seq. or as may be amended.

"Buffer," "buffer area," or "critical area" means a naturally vegetated, undisturbed, enhanced or vegetated zone surrounding a critical area that protects the critical area from adverse impacts to its integrity and value, and is an integral part of the resource's ecosystem.

**C**

"City" means the city of Selah.

"Clearing" means the removal of timber, brush, grass, ground cover or other vegetative matter from the site, which exposes the earth's surface of the site, or any actions, which disturb the existing ground surface.

"Comprehensive plan" means the city of Selah urban growth area comprehensive plan as it now exists or hereafter amended.

"Critical aquifer recharge areas" means areas with a critical recharging effect on aquifers used for potable water, including areas where an aquifer that is a source of drinking water is vulnerable to contamination that would affect the potability of the water, or is susceptible to reduced recharge.

"Critical areas" or "environmentally sensitive areas" means areas that possess important natural functions and embody a variety of important natural and community values. Such areas include aquifer recharge areas, fish and wildlife habitat areas, wetlands and streams, flood hazard and geologic hazard areas. If not conducted properly, development or alteration of such areas may cause significant impacts to the valuable functions and values of these areas and/or may generate risks to the public health and general welfare, and/or to public or private property.

"Critical area report" means a report prepared by a qualified consultant to determine the presence, type, class, size, function and/or value of an area subject to these regulations. Also see Stream reconnaissance report," "Wetland impact assessment report" and "Wildlife report."

"Critical erosion hazard areas" means lands or areas underlain by soils identified by the U.S. Department of Agriculture Soil Conservation Service (SCS) (now known as the Natural Resource Conservation Service) as having "severe" or "very severe" erosion hazard.

"Critical geologic hazard areas" means lands or areas subject to high or severe risk of geologic hazard, including critical erosion hazard areas, critical landslide hazard areas, and critical seismic hazard areas.

"Critical habitat" or "critical fish and wildlife habitat" means habitat areas associated with threatened, endangered, or sensitive species of plant or wildlife (pursuant to WAC 232-12-297(2.4), (2.5) and (2.6) as it exists or may hereafter be amended) and which, if altered, could reduce the likelihood that the species will maintain and reproduce over the long term.

"Critical landslide hazard areas" means lands or areas where there is a high or very high risk of landslide due to a combination of slope, soil permeability, and water.

"Critical seismic hazard areas" means lands or areas where there is a high of seismic events and damage.

**D**

"Delineation manual," "wetland delineation manual," or "wetland delineation methodology" means the manual and methodology used to identify wetlands in the field, in accordance with the approved federal wetland delineation manual and applicable regional supplements. All areas within the city meeting the wetland designation criteria in that procedure are hereby designated critical areas and are subject to the provisions of this chapter. Use of this manual is required by RCW 36.70A.175 as it exists or may hereafter be amended.

"Department" means the city of Selah department of planning or successor agency, unless the context indicates a different city department.

**E**

"Earth/earth material" means naturally occurring rock, soil, stone, sediment, or combination thereof.

"Enhancement" means the improvement of an existing viable wetland, stream or habitat area or the buffers established for such areas, though such measures as increasing plant diversity, increasing fish and wildlife habitat, installing environmentally compatible erosion controls, increasing structural diversity or removing plant or animal species that are not indigenous to the area. Enhancement also includes actions performed to improve the quality of an existing wetland, stream, or habitat area. See also "~~Restortation~~Restoration."

"Erosion" means a process whereby wind, rain, water, and other natural agents mobilize and transport soil particles.

"Erosion hazard areas" means lands or areas that, based on a combination of slope inclination and the characteristics of the underlying soils, are susceptible to varying degrees of risk of erosion. Erosion hazard areas are classified as "low" (areas sloping less than fifteen percent) or "high" (areas sloping more than fifteen percent) on the following: Soil Conservation Service (SCS) now known as the Natural Resource Conservation Service (NRCS). Soil groups may be identified through site-specific analysis.

"Excavation" means the removal or displacement of earth material by human or mechanical means.

"Existing and ongoing agricultural activities" means those activities conducted on lands defined in RCW 84.34.020(2), as it exists or may hereafter be amended, and those activities involved in the production of crops and livestock. Such activities must have been in existence as a July 1, 1990 (the effective date of the Growth Management Act). The definition includes, but is not limited to, operation and maintenance of farm and stock ponds or drainage ditches, irrigation systems, changes between agricultural activities or crops, and normal operation, maintenance or repair of existing serviceable structures, facilities or improved areas. Activities, which bring an area into agricultural use from a previous nonagricultural use, are not considered part of an ongoing activity. An operation ceases to be ongoing when the area on which it was conducted is proposed for conversion to a nonagricultural use or has lain idle for a period of longer than five years, unless the idle land is registered in a federal or state soils conservation program.

"Exotic" means any species of plant or animal, not native to or not usually found as domestic pets in the United States, which is foreign and not indigenous to the Yakima County regional area.

**F**

"Fill/fill material" means a deposit of earth material placed by human or mechanical means.

"Filling" means the act of transporting and placing (by any manner or mechanism) fill material from, to, or on any surface water body or wetland, soil surface, sediment surface or other fill material.

"Fish and wildlife habitat conservation areas" that must be considered for classification and designation include: (a) Areas where endangered, threatened, and sensitive species have a primary association; (b) Habitats and species of local importance, as determined locally; (c) Commercial and recreational shellfish areas; (d) Kelp and eelgrass beds; herring, smelt, and other forage fish spawning areas; (e) Naturally occurring ponds under 20 acres and their submerged aquatic beds that provide fish or wildlife habitat; (f) Waters of the state; (g) Lakes, ponds, streams, and rivers planted with game fish by a governmental or tribal entity; and (h) State natural area preserves, natural resource conservation areas, and state wildlife areas.

## G

"Geologic hazard area" means lands or areas characterized by geologic, hydrologic and topographic conditions that render them susceptible to varying degrees of risk of landslides, erosion, seismic or volcanic activity.

"Grading" means any excavation, filling, clearing, leveling or contouring of the ground surface by human or mechanical means.

## H

"Habitat management" means management of land and its associated resources/features to maintain species in suitable habitats within their natural geographic distribution so that isolated subpopulations are not created. This does not imply maintaining all habitat or individuals of all species in all cases.

"Hazardous materials" means and includes all dangerous and extremely hazardous waste, including petroleum contaminated soils, either singularly or in combination, that is a physical or health hazard whether the materials are in usable or waste condition; and any material that may degrade groundwater quality when improperly stored, handled, treated, used, produced, recycled, disposed of, or otherwise mismanaged. Hazardous materials shall also include, without exception:

(1) All materials defined as or designated by rule as a dangerous waste or extremely hazardous waste under Chapter 70.105 RCW and Chapter 173-303 WAC or as it may be amended;

(2) Any substance defined as or designated by rule as a hazardous substance under Chapter 70.105 RCW and Chapter 173-303 WAC or as it may be amended; and

(3) Petroleum or petroleum products, including any waste oils or sludge's.

"Hydrologically isolated" means wetlands which: (1) have no surface water or ground water connection to a lake, river, or stream during any part of the year; (2) are outside of and not contiguous to any 100-year floodplain of a lake, river, or stream; and (3) have no contiguous hydric soil between the wetland and any lake, river, or stream. May also be a pond excavated from uplands with no surface water connection to a stream, lake, or other wetland.

## I

"In-kind wetland mitigation" means replacement of wetlands with wetlands whose characteristics closely approximate those destroyed or degraded by a regulated activity.

"Injection well" means a "well" that is used for the subsurface emplacement of fluids. (From WAC 173-218-030 or as may be amended.)

"Intentionally created streams" means streams created through purposeful human action, such as irrigation and drainage ditches, grass-lined swales, and canals. This definition does not include stream modifications performed pursuant to city authorization, such as changes or redirection of stream channels.

## L

"Landslide" means episodic down slope movement of a mass of soil or rock.

"Landslide hazard areas" means areas that, due to a combination of slope inclination, relative soil permeability, and hydrologic conditions are susceptible to varying degrees of risk of land sliding. Landslide hazards areas are classified as Class I through IV based on the degree of risk as follows:

(1) Class I/Low Hazard. Areas with slopes of fifteen percent or less.

(2) Class II/Moderate Hazard. Areas with slopes greater than fifteen percent up to forty percent fifteen percent and that are underlain by soils that consist largely of sand or gravel.

(3) Class III/High Hazard. Areas with slopes greater than fifteen percent up to forty percent fifteen percent and that are underlain by soils consisting largely of silt and clay.

(4) Class IV/Very High Hazard. Areas with slopes steeper than fifteen percent with identifiable zones of emergent water (i.e., springs or groundwater seepage), areas of identifiable landslide deposits regardless of slope and all areas sloping more steeply than forty percent.

The slopes previously referenced include only those where the surface drops ten feet or more vertically within a horizontal distance of twenty-five feet.

**M**

"Mitigation" means activities which include:

(1) Avoiding the impact altogether by not taking a certain action or parts of actions.

(2) Minimizing impacts by limiting the degree or magnitude of the action and its implementation.

(3) Rectifying the impact by repairing, rehabilitating, or restoring the affected environment.

(4) Reducing or eliminating the impact over time by preservation and maintenance operations during the life of the action.

(5) Compensating for the impact over time by replacing or providing substitute resources or environments.

While monitoring without additional actions is not considered mitigation for the purposes of these regulations, it shall be part of a comprehensive mitigation program.

"Mitigation sequencing" means considering or performing mitigation actions, as defined in the definition of "mitigation," in a preferred sequence from (1) through (5). Avoidance is preferred and must be considered prior to pursuing other forms of mitigation.

**N**

"Native" means any species of plant or animal which are or were indigenous to the Yakima County regional area.

"Natural heritage wetlands" means wetlands that are identified by scientists of the Washington Natural Heritage Program/DNR as high quality, relatively undisturbed wetlands, or wetlands that support state-listed threatened or endangered species.

**O**

"Off-site mitigation" means performance of mitigation actions, pursuant to standards established in this chapter, on a site or in an area other that the site proposed for conduct of a regulated activity.

"Out-of-kind mitigation" means replacement of wetlands or habitat with substitute wetlands or habitat whose characteristics do not closely approximate those adversely affected, destroyed, or degraded by a regulated activity.

**P**

"Permanent erosion control" means continuous on-site and off-site control measures that are needed to control conveyance of deposition or earth, turbidity, or pollutants after development, construction, or restoration.

"Planning official" means the planning official of the city of Selah department of planning or successor agency.

**Q**

"Qualified consultant/professional" person with experience and training in the pertinent scientific discipline, and who is a qualified scientific expert with expertise appropriate for the relevant critical area subject in accordance with WAC 365-195-905. A qualified professional must have obtained a B.S. or B.A. or equivalent degree in biology, engineering, environmental studies, fisheries, geomorphology, or related field, and have at least five years of related work experience.

(1) A qualified professional for wetlands must be a professional wetland scientist with at least two years of full-time work experience as a wetlands professional, including delineating wetlands using the state or federal manuals, preparing wetlands reports, conducting function assessments, and developing and implementing mitigation plans.

(2) A qualified professional for habitat must have a degree in biology or a related degree and professional experience related to the subject species.

(3) A qualified professional for a geological hazard must be a professional engineer or geologist, licensed in the state of Washington.

(4) A qualified professional for critical aquifer recharge areas means a hydrogeologist, geologist, engineer, or other scientist with experience in preparing hydrogeologic assessments.

**R**

"Reasonable use" means a legal concept articulated by federal and state courts in regulatory taking issues. See "Reasonable use alternatives" for guidelines in determination.

"Reasonable use alternatives" means an action that could feasibly attain or approximate a proposal's objectives, but at a lower environmental cost or decreased level of environmental degradation. Reasonable alternatives may be those over which an agency with jurisdiction has authority to control impacts, either directly or indirectly through requirement of mitigation measures. (See WAC 197-11-440(5) and 197-11-660 or as may be amended.).

"Regulated activities" means activities that have a potential to impact a critical are that is subject to the provisions of the chapter. Regulated activities generally include, but are not limited to, any filling, dredging, dumping or stockpiling, release of contaminants to soil or water, draining, excavation, flooding, clearing or grading, construction or reconstruction, driving pilings, obstructing, clearing, or harvesting.

"Restoration" means actions taken to reestablish wetland, stream or habitat functional values, and the characteristics that have been destroyed or degraded by past alterations (i.e., filing or grading). See also "Enhancement."

**S**

"Secondary habitat" means areas that offer less diversity of animal and plant species than critical areas but are important for performing the essential functions of habitat.

"Seismic hazard areas" means areas that, due to a combination of soil and groundwater conditions, are subject to the risk of ground shaking, subsidence or liquefaction of soils during earthquakes. These areas are typically underlain by soft or loose saturated soils (such as alluvium), have a shallow groundwater table, and are typically located on the floors of river valleys.

"Site" means the location containing a regulated critical area and on which a regulated activity is proposed. The location may be a parcel or portion hereof, or any combination of contiguous parcels where a proposed activity may impact a critical area.

"Slope" means an inclined earth surface, the incline of which is expressed as the ratio of horizontal distance to vertical distance. The slope referenced above includes only those where the surface drops ten feet or more vertically within the horizontal distance of twenty-five feet.

"Spring" means a source of water where an aquifer comes in contact with the ground surface.

"Stream reconnaissance report" means a type of critical area report prepared by an applicant's qualified consultant to describe a stream and to characterize its conditions, wildlife, habitat values and water quality. The report also includes an analysis of potential of proposed activity impacts.

"Streams" means those areas where surface waters produce a defined channel or bed that demonstrates clear evidence of the passage of water and includes, but is not limited to, bedrock channels, gravel beds, sand and silt beds and defined-channel swales. The channel or bed need not contain water year-round. This definition is not intended to include artificially created irrigation ditches, canals, storm or surface water devices, or other entirely artificial watercourses unless they are used by fish or created for the purpose of stream mitigation.

"Structural diversity, vegetative" means the relative degree of diversity or complexity of vegetation in a fish and wildlife habitat area as indicated by the stratification or layering of different plant communities (i.e., ground cover, shrub layer and free canopy), the variety of plant species and the spacing or pattern of vegetation.

"Substrata" means the soil, sediment, decomposing organic matter or combination of these located on the bottom surface of the wetland, lake, stream, or river.

T

"Temporary erosion control" means on-site and off-site control measures that are needed to control conveyance or deposition of earth, turbidity, or pollutants during development, construction, or restoration.

"Tertiary habitat" means habitat that supports some wildlife but does not satisfy the definition of secondary or critical habitat.

U

"Utility" includes natural gas, electric, telephone and telecommunications, cable communications, water, sewer or storm drainage, and their respective facilities, lines, pipes, mains, equipment and appurtenances.

V

"Variance" means permission to depart from the requirements of the specific regulations of this chapter for a particular piece of property.

"Volcanic hazard areas" means areas identified by the U.S. Geological Survey (maps dated 1998 or as hereafter revised) as subject to a risk of large lahars with a recurrence interval of five hundred to one thousand years.

W

"Wells" includes any excavation that is drilled, cored, washed, driven, dug, jetted or otherwise constructed when the intended use of an excavation is for the location, diversion, artificial recharge, or withdrawal of groundwater.

"Wellhead protection area" means the portion of a well's, well fields or spring's zone of contribution defined as such using the criteria established by the city.

"Wetland" or "wetlands" means areas that are inundated or saturated by surface water or groundwater at a frequency and duration to support, and that under normal circumstances do support, a prevalence of vegetation typically adapted for life in saturated soil conditions. Wetlands generally include swamps, marshes, bogs, and similar areas. Wetlands do not include those artificial watercourses intentionally created from nonwetland sites, including but not limited to irrigation and drainage ditches, grass-lined swales, canals, detention facilities, wastewater treatment facilities, farm ponds, and landscape amenities,~~.~~ or those wetlands created after July 1, 1990, that were unintentionally created as a result of the construction of a road, street, or highway. However, wetlands include those artificial wetlands intentionally created from nonwetland areas to mitigate conversion of wetlands. (Wetlands and CAO Updates: Guidance for Small Cities [Eastern Washington Version], Ecology Publication No. 10-06-~~00~~01, as amended.)

"Wetland impact assessment report" means a report prepared by a qualified consultant that identifies, characterizes and analyzes potential impacts to wetland consistent with applicable provisions of these regulations. A wetland impact assessment may be combined with and include a formal wetland delineation.

"Wildlife report" means a report prepared by a qualified consultant that evaluates plant communities and wildlife functions and values on a site, consistent with the format and requirements established by this chapter. This report also includes an analysis of impacts.

(Ord. No. 1943, § 2, 4-8-14)

11.50.040 - Applicability—Regulated activities.

(a) All persons proposing development in a critical area or their buffers must first submit an application pursuant to this chapter, except as exempted pursuant to SMC 11.50.050. These critical area protections shall apply as an overlay to zoning and other land use regulations established by the city.

  (1) Any new development, construction or use within the city that lies within a critical area as defined herein shall comply with the provisions of this chapter. No action shall be taken by any person that results in the alteration or modification of any critical area except as consistent with the requirements, objectives and intent of this chapter.

  (2) Where two or more types of critical areas overlap, requirements for the development shall be consistent with the standards for each critical area.

  (3) These critical area regulations shall apply concurrently with review conducted under the State Environmental Policy Act (SEPA), as locally adopted. Any conditions required pursuant to this chapter may be included in the SEPA review and threshold determination.

(b) To avoid duplication, the following permits and approvals shall be subject to and coordinated with the requirements of this chapter: land clearing; grading; subdivision or short subdivision; building permit, planned development (when permitted by city code); shoreline substantial development; variance, Class 1, 2 or 3 use; and any other permits that may lead to the development or alteration of land.

(c) Administrative actions, such as rezones, annexations, and the adoption of plans and programs, shall be subject to the requirements of this chapter. However, the city administrator, in the exercise of his or her discretion, may permit any studies or evaluations required by this chapter to use methodologies and provide a level of detail appropriate to the administrative action proposed.

(Ord. No. 1943, § 2, 4-8-14)

11.50.050 - Exemptions and nonconforming uses.

The activities listed below are exempt from the provisions of the chapter. Exempt activities shall be conducted using all reasonable methods to avoid impacts to critical areas. Exemption from this chapter shall not be considered permission to degrade a critical area or ignore risks from natural hazards. Incidental damage to, or alteration of, a critical area that is not a necessary outcome of an exempted activity shall be restored and rehabilitated at the property owner's expense.

  (1) Emergency construction or repair necessary to protect life or property from immediate damage by the elements. An emergency is an unanticipated event or occurrence which possess an imminent threat to public health and safety, to private or public property, or to the environment, and which requires immediate action within a time too short to allow full compliance. Once the threat to the public health, safety, or the environment has dissipated, the construction undertaken as a result of the previous emergency shall then be evaluated and brought into reasonable compliance with this chapter with due consideration given to the nature, type and extent of emergency responses and actions and after the fact permits may be required and other actions required to mitigate impacts;

(2) Normal maintenance or repair of existing buildings, structures, roads, utilities, levees, or drainage system, that do not require construction permits, provided the activity does not materially alter, encroach upon, or increase impacts to critical areas or associated buffers;

(3) Existing and ongoing agricultural activities normal or necessary to conduct general farming;

(4) Site investigative work necessary for land use application submittals such as surveys, soil logs, percolation tests and other related activities. In every case, critical area impacts should be minimized and disturbed areas shall be immediately restored;

(5) Passive recreational, scientific or educational activities, including, but not limited to: bicycling, bird watching, boating, canoeing, hiking, hunting, and fishing provided the activity does not alter the critical area or its buffer by changing existing topography, water conditions or water sources;

(6) ~~Minor safety improvements to state and local transportation facilities provided the project meets the exempted size impacts for the critical areas;~~

(7) The operation and maintenance of canals, waterways, drains, reservoirs, or other man-made facilities that now exist or are hereafter created or developed as a part of an irrigation system. Portions of historic waterways that were altered in order to facilitate irrigation delivery are subject to the mitigation requirements of this chapter if they are filled or if new irrigations lines or ditches are placed within wetlands or their required buffers;

(8) Maintenance of above-ground utility transmission lines and poles;

(9) Any streamside management project associated with a single-family residence or agricultural activity designed to achieve, through the use of native or natural vegetation and/or bioengineering alternatives, the functional properties of the critical area and carried out in conformance with a conservation plan or design developed through North Yakima County Conservation District, or by a qualified professional certified to develop such plans or designs according to best management practices;

(10) ~~Activities involving artificially created wetlands or streams intentionally created from nonwetland sites, including but not limited to, grass-lined swales, irrigation and drainage ditches, retention or detention facilities, and landscape features, except wetlands or streams created as mitigation or when the site contains another critical area;~~

(11) ~~Additions to a legally established single-family residential structure in existence before October 1, 2012 located within a wetland buffer or stream buffer may be permitted if all of the following criteria are met:~~

~~(A) The addition is no greater than five hundred square feet of building footprint over that in existence on October 1, 2012;~~

~~(B) The addition is not located closer to the critical area than the existing structure;~~

~~(C) Impacts on critical area functions are avoided consistent with the purpose and intent of this chapter; and~~

~~(D) There are no changes in slope stability, flood conditions or drainage;~~

(12) ~~Permanent additions to a legally established existing and ongoing farming operation in existence before October 1, 2012 (where such farming operation does not include the processing of agricultural products or other industrial aspects of agriculture) located within a wetland buffer or stream buffer may be permitted if all of the following criteria are met:~~

~~(A) The addition is not located closer to the critical area than the other existing structure(s); and~~

~~(B) Impacts on critical area functions are avoided consistent with the purpose and intent of this chapter; and~~

~~(C) There are no changes in slope stability, flood conditions or drainage; and~~

~~(D) Does not meet the "reasonable use alternatives" requirements.~~

(Ord. No. 1943, § 2, 4-8-14)

11.50.060 - ~~Exemptions~~Exceptions.

~~(a) Exception—Subdivision and Short Plats with Substantial Completion of Infrastructure. A building permit application shall not be denied under this chapter if there has been substantial completion of the infrastructure of the plat within which the subject property of the permit is specifically located. A determination of substantial completion shall be based on the city administrator's assessment of existing constructed infrastructure such as streets, utilities, and drainage improvements.~~

~~(1) Typically "substantial construction" means the amount of construction within a particular project area which has impacted critical areas to the maximum extent that would be attributable to the project actions and on-site mitigation is neither economically nor ecologically viable. Substantial construction may also require off-site mitigation to ensure "no net loss" of wetland function or the function of other critical areas.~~

~~(2) The city administrator may confer with other city department heads, including the city attorney, regarding the consequences of a decision to deny a building permit for a project with a valid clearing and grading permit, approved site plans, and an authorization to proceed with construction.~~

(a) Exception. Public Agency and Utility. If the application of this Title would prohibit a development proposal by a public agency or public utility, the agency or utility may apply for an exception pursuant to this Section.

(b) Exception. Reasonable Use Alternatives. The city may modify the requirements of this section in specific cases when necessary to allow reasonable use of an applicant's property.

(1) Reasonable Use Review Criteria. To qualify for such relief the applicant must demonstrate all of the following:

(A) That no other reasonable use can be made of the property that will have a lesser impact on the critical area;

(B) That there are no feasible and reasonable on-site alternatives to the proposed activities, including changes in site layout, reductions in density, and similar factors that would allow a reasonable economic use with fewer impacts;

(C) That the proposed use does not pose a material threat to the public health, safety or welfare;

(D) Any alteration shall be the minimum required to allow reasonable use of the property;

(E) The inability of the proponent to derive reasonable use of the property shall not be the result of applicant's actions after the effective date of the ordinance codified in this section; and

(F) The proposal is consistent with other applicable regulations and standards.

(2) Exception Request and Review Process. A request for a reasonable use exception shall be submitted to the city planning department and shall include a critical area report, including mitigation plan, if necessary; and any other related project documents, such as permit applications to other agencies, special studies, and environmental documents prepared pursuant to the State Environmental Policy Act (Chapter 43.21C RCW or as it may be amended) (if reasonable necessary to evaluate the application). The planning official shall prepare a recommendation based on review of the submitted information, a site inspection, and the requested proposal's compliance with the reasonable use exception criteria in subsection (b)(1) of this section.

(3) A Reasonable Use Exception. Reasonable use exceptions shall be processed according to the provisions of a Class 2 review process in SMC 10.06.020 or as may be amended and may be approved, approved with conditions, or denied based on the proposal's ability or lack of ability to

comply with all of the reasonable use exception review criteria in subsection (b)(1) of this section. Any alteration of a critical area(s) approved under this section may be subject to appropriate conditions and will require mitigation under an approved mitigation plan.

(4) Burden of Proof. The burden of proof shall be on the applicant to bring forth evidence in support of the application and to provide sufficient information on which any decision has to be made on the application.

(Ord. No. 1943, § 2, 4-8-14)

11.50.070 - Reference maps and materials.

The city shall maintain reference maps and materials that provide information on the general locations of critical areas. Critical areas data mapping shall be for illustrative, not regulatory, purposes. Since boundaries are generalized, the application of this section and the actual type, extent and boundaries of critical areas shall be determined and governed by the classification section established for each critical area. In the event of any conflict between the critical area location or designation shown on the city's maps, ~~and the criteria and standards established in this section,~~ or the site-specific conditions, ~~the criteria, standards and/or~~ site-specific conditions shall take precedence. Reference maps and inventories shall include, but are not limited to, the following:

(1) Wetlands map, based upon U.S. Fish and Wildlife Service National Wetlands.

(2) Fish and wildlife habitat area maps, based on Washington Department of Fish and Wildlife priority habitats and species data.

(3) Soils maps, based upon Yakima County Soils Survey, May, 1985. United States Department of Agriculture, Natural Resources Conservation Service (NRCS).

(4) Steep slope maps, Yakima County GIS.

(5) United States Geological Survey (USGS) 7.5 minute Series Topographic Quadrangle Maps.

(6) Aerial photos, Yakima County GIS.

(7) City of Selah Urban Growth Area Comprehensive Plan, January 2005, or as amended.

(8) Yakima County Regional Shorelines Master Program, September 2008, or as amended.

(9) City of Selah critical area maps: aquifer recharge areas, ~~streams, lakes,~~ potential wetlands, ~~and~~ floodplains~~;~~, and geologically hazardous areas, prepared ~~December 2003 and 2004~~October 2015 and contained in the Selah Comprehensive Plan, Natural Systems Element.

(10) The manual and methodology used to identify wetlands in the field, in accordance with the approved federal wetland delineation manual and applicable regional supplements.

(11) Washington State Wetlands Rating System for Eastern Washington—Revised (Publication No. 04-06-15), March 2007, or as amended.

(12) "The Flood Insurance Study for Yakima County, Washington and Incorporated Areas" dated November 18, 2009, and any revisions thereto, with an accompanying flood insurance rate map (FIRM), and any revisions thereto; and

(13) Approved special reports previously completed for a subject property.

(Ord. No. 1943, § 2, 4-8-14)

11.50.080 - Application.

(a) Review Process. Any new development, construction or use shall require that applicants disclose activities within two hundred fifty feet of a known or suspected critical area. The provisions of the section shall be applied to any such proposal. The review process shall proceed as follows:

(1) Application Meeting/Site Visit. Upon receiving a land use or development proposal, the planning official may schedule an application meeting and/or site visit with the proponent for purposes of a preliminary determination whether the proposal is likely to result in impacts to the functions and values of critical areas or pose health and safety hazards. At this meeting, the planning official may discuss the requirements of this chapter and other applicable regulations; provide critical area maps and other available reference materials; outline the review and permitting process; and work with the proponent to identify any potential concerns with regards to critical areas.

(2) Application and SEPA Checklist. For all nonexempt proposals, the proponent shall submit all relevant land use/development applications, together with a completed SEPA checklist.

(3) Determination of Need for Critical Areas Report. Based upon the preapplication meeting, if conducted, application materials, and the SEPA Checklist. The planning official shall determine if there is cause to require a critical area report. In addition, the planning official may use critical areas maps and reference materials, information and scientific opinions from appropriate agencies, or any reasonable evidence regarding the existence of critical area(s) on or adjacent to the site of the proposed activity. See subsection (c) of this section.

(4) Documentation and Notification. The planning official shall document the pre-application meeting if conducted, and/or site visit, application and SEPA threshold determination, and any other steps or findings regarding the determination of whether a critical areas report will be required. The applicant shall receive notice of the determination and any findings that support it.

(b) Application Review and Conditions. Any new development, construction or use shall require that applicants disclose activities within two hundred fifty feet of a known or suspected critical area. The provisions of the section shall be applied to any such proposal. The review process shall proceed as follows:

(1) A permit shall only be granted if the permit, as conditioned, is consistent with the purpose and intent of this chapter. Additionally, permits shall only be granted if:

(A) A proposed action:

(i) Avoids significant adverse impacts to critical areas;

(ii) Takes affirmative and appropriate measures to minimize significant adverse impacts to critical areas; or

(iii) Mitigates (compensates for) unavoidable adverse impacts to critical areas; and

(iv) Assures no net loss of wetland function or value; and

(v) The proposal is consistent with all other applicable local, state, and federal regulations and standards.

(2) The proposal is compatible in design, scale, and use with other development or potential development in the area.

(3) The proposed actions implement, to the maximum extent possible, the best available construction, design, and development techniques that will result in the least adverse impact to the critical area.

(4) Any alteration to a critical area, unless otherwise provided for in this chapter, shall be reviewed and approved, approved with conditions, or denied based on the proposal's ability to comply with all of the criteria in subsection (b)(1)(A)(i) through (b)(1)(A)(v) of this section. The planning official shall document the pre-application meeting if conducted, and/or site visit, findings of an exemption, SEPA, or any other required to review application.

(5) The city may condition the proposed activity as necessary to mitigate impacts or address adverse impacts to critical areas and to conform to the standards required of this chapter. Through the review process the city of Selah shall have the authority to attach such conditions to any permit or authorization issued in order to mitigate impacts to critical area(s) and to carry

out the provisions of this chapter. Such conditions may include, but are not limited to, the following:

(A) Specification of allowable lot sizes;

(B) Provisions for additional buffers relative to the intensity of a use or activity;

(C) Requirements and/or restrictions on the construction, size, location, bulk and/or height, etc., of structure(s);

(D) Dedication of necessary easements for utilities, conservation, open space, etc.;

(E) Imposition of easements agreements, sureties, deed restrictions, covenants, etc., on the future use and/or division of land that run with the land and are filed and recorded in the office of the Yakima County auditor;

(F) Limitations on the removal of existing vegetation;

(G) Additional measures to address issues such as erosion control, stormwater management, filling, grading, etc.;

(H) Development of a mitigation plan to create, enhance, or restore damaged or degraded critical area(s) on and/or off site; and

(I) Any monitoring and/or maintenance plans necessary to implement the provisions of the chapter.

(6) Except as provided for by this chapter, any project that cannot adequately mitigate its impacts to critical areas in the sequencing order of preferences shall be denied.

(7) Favorable Determination. If the administrator determines that the proposed activity meets the criteria in this section and complies with the applicable provisions of this chapter, the administrator shall prepare a written notice of determination and identity any required conditions of approval. The notice of determination and conditions of approval shall be included in the project file and be considered in the next phase of the city's review of the proposed activity in accordance with any other applicable codes or regulations.

(A) Any conditions of approval included in a notice of determination shall be attached to the underlying permit or approval. Any subsequent changes to the conditions of approval shall void the previous determination pending review of the proposal and conditions of approval by the planning official.

(B) A favorable determination should not be construed as an endorsement or approval of any underlying permit or approval.

(8) Unfavorable Determination. If the administrator determines that the proposed activity does not adequately mitigate its impacts on the critical area and/or does not comply with the criteria in subsection (b)(4) of this section and the provisions of this chapter, the administrator shall prepare a written notice of the determination that includes findings of noncompliance.

(A) No proposed activity or permit shall be approved or issued if it is determined that the proposed activity does not adequately mitigate its impacts on the critical areas and/or does not comply with the provisions of this chapter.

(B) Following notice of determination that the proposed activity does not meet the review criteria and/or does not comply with the applicable provisions of this chapter, the applicant may request consideration of a revised critical areas report. If the revision is found to be substantial and relevant to the critical area review, the administrator may reopen the critical area review and make a new determination based on the revised report.

(9) Completion of the Critical Area Review. The city's determination regarding critical areas pursuant to this chapter shall be final concurrent with the final decision to approve, approve with conditions, or deny the development proposal or other activity involved.

(c) Critical Areas Report. If the planning official determines that the site of a proposed development potentially includes, or is adjacent to, critical area(s), a critical areas report may be required. When required, the expense of preparing the critical areas report shall be borne by the applicant. The content, format and extent of the critical areas report shall be approved by the planning official.

(1) The requirement for a critical areas report may be waived by the planning official if there is substantial evidence that:

(A) There will be no alteration of the critical area(s) and/or the required buffer(s);

(B) The proposal will not impact the critical area(s) in a manner contrary to the purpose, intent and requirements of this chapter and the city's comprehensive land use plan; and

(C) The minimum standards of this section will be met.

(2) No critical area report is required for proposals that area exempt from the provisions of this chapter.

(3) Critical area reports shall be completed by a qualified professional in the area to which the report pertains, approved by the planning official, who is knowledgeable about the specific critical area(s) in question.

(4) At a minimum, a required critical areas report shall contain the following information:

(A) Applicant's name and contact information, permits being sought, and description of the proposal;

(B) A copy of the site plan for the development proposal, drawn to scale and showing:

(i) Identified critical areas, buffers, and the development proposal with dimensions;

(ii) Limits of any areas to be cleared; and

(iii) A description of the proposed stormwater management plan for the development and consideration of impacts to drainage alterations;

(C) The names and qualifications of the persons preparing the report and documentation of any fieldwork performed on the site;

(D) Identification and characterization of all critical areas, wetland, water bodies, and buffers adjacent to the proposed project area. Delineation of wetlands shall be accomplished using the Washington State Wetlands Identification and Delineation Manual (Publication No. 96-94), March 1997 (as amended or revised);

(E) An assessment of the probable cumulative impacts to critical areas resulting from the proposed development of the site;

(F) An analysis of site development alternatives;

(G) A description of reasonable efforts made to apply mitigation sequencing to avoid, minimize, and mitigate impacts to critical areas;

(H) A mitigation plan, as necessary, developed in accordance with the mitigation requirements of this section and site assessment and evaluation, including, but not limited to:

(i) The identification of impacts of the proposed use or development within or adjacent to a critical area or buffer on the critical area; and

(ii) The impacts of proposed alteration of a critical area or buffer on the development proposal, other properties and the environment;

(I) A discussion of the performance standards applicable to the critical area and proposed activity;

(J) Financial guarantees to secure compliance; and

(K) Any additional information required for specific critical areas as listed in subsequent sections of this chapter.

(5) The planning official may request any other information reasonably deemed necessary to evaluate impacts to critical areas.

(d) Mitigation Requirements. The applicant shall seek to avoid material impacts that degrade the functions and values of critical areas. If alteration is not reasonably avoidable, material adverse impacts to critical areas and buffers resulting from the development or use proposed shall be mitigated in accordance with an approved critical areas report and SEPA documents. Mitigation shall be on-site, when possible, and sufficient and reasonably maintain the functions and values of the critical area, and to prevent risk from a hazard posed by a critical area.

(1) Mitigation Sequencing. Applicants shall demonstrate that all reasonable efforts have been examined with the intent to avoid and minimize impacts to critical areas. When an alteration of a critical area is proposed, such alteration shall be avoided, minimized, or compensated for in the following order of preference:

(A) Avoiding the impact by not taking a certain action or parts of an action;

(B) Minimizing or reducing impacts by reducing the scope of the proposed use or development; by using accepted technology, engineering or design, or by taking affirmative steps, such as project design, relocation, or timing to avoid or reduce impacts;

(C) Rectifying the impacts to wetlands, critical aquifer recharge area(s), frequently flooded area(s), and habitat conservation area(s) by repairing, rehabilitating, or restoring the affected environment to historical conditions or the conditions existing at the time of initiation of the project;

(D) Minimizing or eliminating the risk or impact by restoring, stabilizing or protecting the critical area through engineered or other methods;

(E) Reducing or eliminating the risk or impact over time by preservation and maintenance operations for the duration of the proposed use or development;

(F) Compensating for the impact to critical areas, wetlands, critical aquifer recharge area, frequently flooded areas, and habitat conservation areas by replacing, enhancing, or providing substitute resources or environments; and

(G) Monitoring the risk or other required mitigation and taking remedial action when necessary.

(2) Mitigation Plan. When mitigation is required, the applicants shall submit for approval a mitigation plan as part of the critical area report. The mitigation plan shall include:

(A) A written report identifying mitigation objectives, including:

(i) A description of the anticipated impacts to the critical area and the proposed mitigating actions and/or compensation measures, including the site selection criteria; identification of compensation objectives; identification of critical area functions and values; and dates for beginning and completion of site compensation construction activities;

(ii) A review of the best available science for the proposed mitigation and identification of authors (including curriculum vitae); and

(iii) An analysis of mitigation benefits derived from the compensation project.

(B) Measurable criteria for evaluation of the mitigation plan and compliance with the requirements of this chapter.

(C) Written specifications and descriptions of proposed mitigation, including, but not limited to:

(i) The proposed construction sequence, timing, and duration;

(ii) Grading and excavation details;

(iii) Erosion and sediment control features;

(iv) A planting plan specifying plant species, quantities, locations, size, spacing, and density; and

(v) Measures to protect and maintain plants until established.

(D) A program for monitoring mitigation measures and/or compensation project, and for assessing the completed project over time. The program may include a schedule for site monitoring and compliance with performance standards. A monitoring report may be required to document milestones, successes, problems, and contingency actions for either mitigation measures or compensation project. The mitigation measures or compensation project shall be monitored for a reasonable period necessary to establish that performance standards have been satisfied.

(E) Identify potential or alternative courses of action, and any corrective measures to be considered if monitoring or evaluation indicates the project has failed to meet performance standards.

(e) Agency Review. In cases where the planning official does not have adequate knowledge or training to determine the sufficiency and accuracy of information contained within a critical area report or mitigation plan, said reports or plans shall be submitted to qualified agencies or consultants for review and recommendations prior to acceptance by the city.

(f) Surety/Bonding. If a development proposal is subject to mitigation, maintenance or monitoring plans, the city of Selah, in a form acceptable to the city council and the city attorney, may require security, bond or other assurance device reasonable or necessary to insure performance and compliance.

(Ord. No. 1943, § 2, 4-8-14)

11.50.090 - Appeals.

Any decision to approve, condition, or deny a development proposal or other activity based on the requirements of this chapter may be appealed according to, and as part of, the appeal procedure for the permit or approval involved.

(Ord. No. 1943, § 2, 4-8-14)

11.50.100 - Enforcement.

Violation or failure to comply with the provisions of this chapter or any permit issued hereunder shall be subject to enforcement actions by the city of Selah, including but not limited to, (A) revocation of any issued permit(s); (B) remedies authorized in the Selah Municipal Code, development regulations and shorelines master program or any other land use regulation of the city of Selah; and (C) remedies and penalties provided by any other applicable law. The city attorney, when authorized by the mayor and council, shall seek penalties, remedies, injunctions and other legal sanctions necessary for the enforcement of this chapter. In addition to costs allowed by these regulations, the prevailing party in an enforcement action may, at the court's discretion, also be allowed interest and reasonable attorney fee. The city attorney shall seek such costs, interest, and the reasonable attorney fees on behalf of the city of Selah when the city is the prevailing party.

(Ord. No. 1943, § 2, 4-8-14)

11.50.110 — Critical Aquifer recharge areas.

(a) ~~Classification~~Mapping.

(1) The CARAs are depicted in the map titled "Aquifer Recharge Area Contamination Susceptibility, City of Selah, WA," adopted in the City of Selah Comprehensive Plan Natural Systems Element. The CARA map data was developed by Yakima County through a geographic information system (GIS) analysis using the methodology outlined in the Washington Department of Ecology "Critical Aquifer Recharge Area Guidance Document" (Publication 05-10-028, or as revised). This map depicts the

general location of the critical aquifer recharge areas. All applications for development within the City that are located within a mapped CARA will be required to follow the performance standards of this chapter. The CARA map estimates areas of moderate, high and extreme susceptibility to contamination, in addition to wellhead protection areas. To characterize hydrogeologic susceptibility of the recharge area to contamination, the GIS analysis used the following physical characteristics:

- Depth to groundwater;
- Soil (texture, permeability, and contaminant attenuation properties);
- Geologic material permeability;
- Recharge (amount of water applied to the land surface, including precipitation and irrigation).

(2) Wellhead Protection Areas. The CARA map includes those Wellhead Protection Areas for which the County has maps. The City of Selah maintains a map of Wellhead Protection Area locations. Wellhead Protection Areas are required for all Class A public water systems in the State of Washington. The determination of a wellhead protection area is based upon the time of travel of a water particle from its source to the well. Water purveyors collect site specific information to determine the susceptibility of the water source to surface sources of contamination. Water sources are ranked by the Washington State Department of Health with a high, moderate or low susceptibility to surface contamination. Wellhead protection areas are defined by the boundaries of the 10-year time of groundwater travel, in accordance with WAC 246-290-135. For purposes of this chapter, all wellhead protection areas shall be considered highly susceptible. ~~The following three-level classification scheme is used,to determine the level of protection necessary for land areas:~~

~~(1) Extreme Potential. Rivers, creeks, wetlands, lakes and ponds, and lands that have been specifically identified as critical recharge areas based on reliable scientific data.~~

~~(2) High Potential. Lands adjacent to rivers, creeks, wetlands, lakes and ponds, which include soils that show permeability ratings in the county soil survey of more than twenty inches per hour within sixty inches of the soil surface.~~

~~(3) Moderate Potential. Lands with soil that show permeability ratings in the county soil survey of more than twenty inches per hour within sixty inches of the soil surface.~~

(b) Designation. CARAs are areas with a critical recharging effect on aquifers used for potable water, including areas where an aquifer that is a source of drinking water is vulnerable to contamination that would affect the potability of the water, or is susceptible to reduced recharge, as defined by WAC 365-190-030(3). CARAs have prevailing geologic conditions associated with infiltration rates that create a high potential for contamination of groundwater resources or contribute significantly to the replenishment of groundwater. The following areas have been identified based on local conditions.

1. Wellhead Protection Areas. Wellhead protection areas shall be defined by the boundaries of the 10-year time of groundwater travel, or boundaries established using alternate criteria approved by the Department of Health in those settings where groundwater time of travel is not a reasonable delineation criterion, in accordance with WAC 246-290-135.
2. Special Protection Areas. Special protection areas are those areas defined by WAC 173-200-090.

~~The city of Selah adopts those aquifer recharge areas within the city identified by Yakima County, both present and in the future, and designates each as it is identified in accordance with the classification provisions. Where no specific hydrogeologic studies have been completed, the city may use existing soil, surficial geologic and well log information to determine where recharge areas are likely to be located. Therefore, aquifer recharge areas in the city of Selah shall be designated as they are identified in accordance with the classification provisions. Because the classification focuses on areas where recharge is generally known to occur, protections shall be broad enough to preserve essential recharge functions and values.~~

(c) Performance Standards. In addition to the general provisions of this chapter and the requirements of the underlying land use zoning, the following minimum standards shall apply to development activities within and adjacent to aquifer recharge areas:

(1) Development activities within an aquifer recharge area shall be designed, developed and operated in a manner that will not potentially degrade groundwater resources nor adversely affect the recharging of the aquifer.

(2) A hydrogeologic study and/or ongoing monitoring may be required to access impacts of development activities on groundwater resources.

(3) All proposed activities within aquifer recharge areas must comply with the water source protection requirements of the Federal Environmental Protection Agency and the Yakima County Health District.

(4) On-site stormwater facilities shall be designed and installed in all aquifer recharge areas, so as to provide both detention and treatment of all runoff associated with the development.

(5) All development occurring within aquifer recharge areas shall be required to connect to city sewer and water systems, and on-site sewage disposal shall be prohibited except as may be approved by city council and permitted by the Yakima County Health District.

(6) Landfills, junkyards/salvage yards, mining, wood treatment facilities, or any other activity that could impair the recharge of a critical aquifer recharge area is not permitted within areas of high or moderate recharge potential unless in accordance with applicable zoning regulations, and, provided the applicant can satisfactorily demonstrate that potential negative impacts to groundwater can be prevented.

(7) All storage tanks, whether above or underground shall be required to be constructed so as to be protected against corrosion for the operational life of the tank, to prevent any release of hazardous substances to the ground, groundwaters, or surface waters, and to utilize appropriate containment methods.

(8) Any agricultural activities conducted within aquifer recharge areas shall incorporate best management practices concerning waste disposal, fertilizer/pesticide/herbicide use, and stream corridor management. If necessary, applicants shall seek technical assistance from the North Yakima County Conservation District or the Washington State University Cooperative Extension Office.

(9) Application of pesticides, herbicides and fertilizer within aquifer recharge areas shall comply with timing and rates specified on product packaging.

(10) Vehicle repair and servicing activities must be conducted over impermeable pads and within covered structures capable of withstanding normally expected weather conditions. Chemicals used in the process of vehicle repair and servicing must be stored in a manner that protects them from weather and provides containment should leaks occur. No dry wells shall be allowed in CARAs on sites used for vehicle repair and servicing. Dry wells existing on the site prior to facility establishment must be abandoned using techniques approved by the State Department of Ecology prior to commencement of the proposed activity.

(d). Use of Reclaimed Water for Surface Percolation or Direct Recharge. Water reuse projects for reclaimed water must be in accordance with the adopted water or sewer comprehensive plans that have been approved by the State Departments of Ecology and Health.

1. Use of reclaimed water for surface percolation must meet the groundwater recharge criteria given in RCW 90.46.010(15) and 90.46.080. The State Department of Ecology may establish additional discharge limits in accordance with RCW 90.46.080(2).

2. Direct injection must be in accordance with the standards developed by authority of RCW 90.46.042.

(Ord. No. 1943, § 2, 4-8-14)

11.50.120 - Fish and wildlife habitat conservation areas.

(a) Classification. Fish and wildlife conservation areas include:

(1) Areas with which state or federally designated endangered, threatened, and sensitive species have a primary association;

(2) Habitats of local importance, including but not limited to areas designated as priority habitat by the Washington Department of Fish and Wildlife;

(3) Naturally occurring ponds under 20 acres and their submerged aquatic beds that provide fish or wildlife habitat, including those artificial ponds intentionally created from dry areas in order to mitigate impacts to ponds;

(4) Waters of the state, including lakes, rivers, ponds, streams, inland waters,

(5) Underground waters, and all other surface waters and watercourses within the jurisdiction of the state of Washington; and

(6) Lakes, ponds, streams, and rivers planted with game fish by a governmental or tribal entity.

"Fish and wildlife conservation areas" does not include such artificial features or constructs as irrigation delivery systems, irrigation infrastructure, irrigation canals, or drainage ditches that lie within the boundaries of and are maintained by a port district or an irrigation district or company.

~~The Washington Department of Fish and Wildlife (WDFW) has identified those fish and wildlife resources that are considered a priority for management and conservation. Priority habitats are those with unique or significant value to many fish or wildlife species. Priority species are those which require special efforts to ensure their perpetuation because of their low numbers, sensitivity to habitat alterations, tendency to form vulnerable aggregations or because they hold commercial, recreational, or tribal importance. The city of Selah shall use the WDFW Priority Habitat and Species Program to classify all fish and wildlife habitat conservation areas within the city of Selah and the Selah Urban Growth Area Boundary. Two classifications shall apply:~~

~~(1) Critical. Areas within which state or federally designated endangered, threatened and sensitive species have a primary association, including anadromous fish species and habitats requiring special consideration under RCW 36.70A.172(1) or as may be amended.~~

~~(2) Awareness. All other priority habitats and species identified by WDFW.~~

(b) ~~Designation.~~ Mapping. The following maps and data are hereby adopted and are available from the city and/or the listed governmental agency:

1. Washington Department of Fish and Wildlife Priority Habitat and Species Maps;
2. Washington State Department of Natural Resources, Official Water Type Reference Maps, as amended;
3. Anadromous and resident salmonid distribution maps published by the Department of Fish and Wildlife Salmonid Stock Inventory; and
4. City of Selah Waterways and Wetlands and Flood Hazard maps – City of Selah Comprehensive Plan Natural Systems Element.

The above maps are to be used as a guide for the city, project applicants, and/or property owners and should be continuously updated as new critical areas are identified. The above maps are a reference and do not provide a final critical area designation.~~Fish and wildlife conservation areas are designated under the Washington Department of Fish and Wildlife Priority Habitat and Species Program. Priority habitats are considered to be priorities for conservation and management. Priority species require protective measures for their perpetuation due to their population status, sensitivity~~

~~to habitat alteration, and/or recreational, commercial, or tribal importance. Priority habitat and species maps prepared by Yakima County based on WDFW data show the range of existing habitat by species.~~

(c) Standards. In addition to the general provisions of this section and the requirements of the underlying zoning district, the following minimum standards shall apply to development activities within and adjacent to fish and wildlife habitat conservation areas:

(1) Critical area reports for fish and wildlife habitat conservation areas shall include a habitat assessment to evaluate the presence or absence of a potential critical species or habitat;

(2) The Washington State Department of Fish and Wildlife priority habitat and species management recommendations shall be consulted in developing specific measures to protect a specific project site;

(3) All projects shall comply with the applicable federal, statute and local regulations regarding the species and habitats identified upon a site;

(4) Establishment of Buffers. When needed to protect the functions and values of habitat conservation areas, the planning official shall require the establishment of buffer areas for activities in or adjacent to such areas. Buffers shall consist of an undisturbed area of natural vegetation, or areas identified for restoration. Buffer widths shall reflect the sensitivity of the habitat and the intensity of activity proposed, and shall be consistent with the management recommendations issued by the Washington State Department of Fish and Wildlife;

(5) As determined through the site-specific study, mitigation measures shall be implemented that maintain the base line populations and reproduction rates for the particular species; and

(6) As determined through the site-specific study, appropriate habitat conservation, management and monitoring plan(s) shall be developed and implemented, with any necessary surety to ensure compliance with such plan(s) being provided as described in this chapter.

(Ord. No. 1943, § 2, 4-8-14)

11.50.130 - Wetlands.

(a) Classification. The city of Selah adopts wetland determinations as set forth in RCW 36.70A.030(20) or as may be amended and classification shall be in accordance with the Washington State Wetlands Rating System for Eastern Washington, publication no. 14-06-030, or as updated or amended:

(1) Category I. Category I wetlands are those that score over seventy points on the rating system. They are those that:

(A) Represents a unique or rare wetland type; or

(B) Are more sensitive to disturbance than most other wetlands; or

(C) Are relatively undisturbed and contain ecological attributes that are impossible to replace within a human lifetime; or

(D) Provide a very high level of functions.

The city of Selah does not wish to risk any degradation to these wetlands. Generally, these wetlands are not common and make up a small percentage of the wetlands in Eastern Washington. Category I wetlands include alkali wetlands, bogs and calcareous fens, wetlands of high conservation value – these wetlands have been identified by scientists from the National Heritage Program as important ecosystems for maintaining plant diversity, ~~natural heritage wetlands,~~ mature and old-growth forested wetlands with slow growing trees, forests with stands of aspen, and Wetlands that perform functions well - these wetlands perform between 19-21 points on the wetlands rating system questions related to functions present.~~wetlands that perform many functions well, as measured by the rating system.~~

(2) Category II. Category II wetlands are those that score between fifty-one and sixty-nine points on the rating system. They generally are:

(A) Forested wetlands in the ~~channel migration zone~~floodplains of rivers;

(B) Matured and old-growth forested wetlands containing fast growing trees;

(C) Vernal pools ~~present within a mosaic of other wetlands~~; or

(D) ~~Those wetlands with a moderately high level of functions.~~Wetlands that perform functions well. These wetlands perform between 19-21 points on the wetlands rating system questions related to functions present.

These wetlands are difficult, though not impossible, to replace. They provide high levels of some functions. These wetlands occur more commonly than Category I wetlands, but still need a high level of protection.

(3) Category III. Category III wetlands are wetlands with a moderate level of functions (scores between 16-18 points) and can often be adequately replaced with a well-planned mitigation project.~~those that score between thirty to fifty points on the rating system~~. Wetlands scoring between 16-18 points generally have been disturbed in some ways, and are often less diverse or more isolated from other natural resources in the landscape than Category II wetlands.~~They generally are:~~

~~(A) Vernal pools that are isolated; or~~

~~(B) Wetlands with a moderate level of functions as measured by the rating system.~~

~~These wetlands have generally been disturbed in some manner, and are often smaller, less diverse and/or more isolated in the landscape than Category II wetlands. They provide high levels of some functions. These wetlands occur more commonly than Category I wetlands, but still need a high level of protection.~~

(4) Category IV. Category IV wetlands have the lowest levels of functions (scores less than 16 points) and are often heavily disturbed. These are wetlands that we should be able to replace, and in some cases, improve. However, experience has shown that replacement cannot be guaranteed in any specific case. These wetlands may provide some important functions, and also need to be protected.~~Category IV wetlands have the lowest level of functions, as measured by the rating system, and are often heavily disturbed. They score less than thirty points. These are wetlands that could be replaced, and in some cases improved. These wetlands do provide some important functions, and should be afforded some degree of protection.~~

(b) Designation. To date there has been no wetlands ~~mapping~~ field inventory done specifically for the city of Selah vicinity. To remedy this, the city should pursue an accurate accounting of all wetlands in the city's urban growth area based on the manual and methodology used to identify wetlands in the field, in accordance with the approved federal wetland delineation manual and applicable regional supplements. However, until funding is obtained to conduct a comprehensive inventory of wetlands, the National Wetlands Inventory (NWI) maps shall be used as a base designation. The NWI maps, along with other supportive documentation, shall be used to review development proposals, but because the National Wetlands Inventory was done at such a broad scale, local verification according to the classification criteria shall be part of the standard process for identifying and designating wetlands.

(c) Performance Standards. In addition to the general provisions of this section and the requirements of the underlying zoning district, the following minimum standards shall apply to the development activities within and adjacent to wetland areas:

(1) The following buffer zones are required adjacent to and outside of all regulated wetlands according to the following schedule. There is an exception for Category III and IV wetlands between one thousand and four thousand square feet provided the wetland meets the criteria of (c)(1)(A) of this section:

- Category I—Two hundred fifty feet;
- Category II—Two hundred feet;
- Category III—One hundred fifty feet;
- Category IV—Fifty feet.

The standard buffer widths shall be applied unless the planning official determines through a scientifically supportable method that a greater or lesser buffer width would serve to protect the functions and values of a particular wetland. The standard buffer widths may not be reduced by more than twenty-five percent or to no less than thirty-five feet whichever is greater.

The planning official may also consider buffer averaging.

Averaging to allow reasonable use of the parcel may be permitted when all of the following are met:

(A) There are no feasible alternatives to the site design that could be accomplished without buffer averaging; and

(B) The averaged buffer will not result in degradation of the wetland's functions and values as demonstrated by a critical areas report from a qualified wetland professional; and

(C) The total buffer area after averaging is equal to the area required without averaging; and

(D) The buffer at its narrowest point is never less than either seventy-five percent of the required buffer width or seventy-five feet for Category I and II, or fifty feet for Category III, and twenty-five feet for Category IV, whichever is greater.

(2) Greater buffer widths or revegetation of an inadequate plant community may be required where necessary to ensure development does not result in adverse impacts to wetlands.

(A) Impacts allowed under this provision to these wetlands will be fully mitigated as required in the mitigation section.

(B) All Category I and Category II wetlands between one thousand and four thousand square feet should be evaluated with full mitigation sequencing and buffer establishment. Any approved impacts should be adequately compensated by mitigation.

(C) Wetlands larger than four thousand square feet will be evaluated using standard procedures for wetland review.

(D) Mitigation consistent with the mitigation ratios set forth in Table A-19. Wetlands as CAO updates; Guidance for Small Cities (Eastern Washington Version) Ecology Publication Number 10-06-001, or as may be updated or amended, may be required.

(3) Wetland buffer zones shall be retained in their natural condition. Where buffer disturbances are unavoidable during adjacent construction, revegetation with native plant materials will be required.

(4) Wetland alteration proposals shall be approved only if no alternative is available. When no alternative exists, wetland replacement shall be used to mitigate impacts and shall be based on the functions and values of the particular wetland being impacted. Simplified ratios for wetlands replacement projects shall be as follows:

| | Type of Mitigation* | | |
|---|---|---|---|
| Category and Type of Wetland | Creation or Re-establishment | Rehabilitation | Enhancement |
| Category 1: Bog, Natural Heritage site | Not considered possible | Case by case | Case by case |

| | Type of Mitigation* | | |
|---|---|---|---|
| Category and Type of Wetland | Creation or Re-establishment | Rehabilitation | Enhancement |
| Category I: Mature Forested | 6:1 | 12:1 | 24:1 |
| Category I Based on functions | 4:1 | 8:1 | 16:1 |
| Category II | 3:1 | 6:1 | 12:1 |
| Category III | 2:1 | 4:1 | 8:1 |
| Category IV | 1.5:1 | 3:1 | 6:1 |

* Mitigation types defined in Section 16.80.035 Definitions – "Compensatory Mitigation"

~~(A) Category I: 6-1;~~

~~(B) Category II: 3-1;~~

~~(C) Category III: 2-1;~~

~~(D) Category IV: 1.5-1.~~

Wetland enhancement ratios shall not be less than one and one-half to one for replacement.

(5) The following activities are allowed to occur in wetlands and wetland buffer zones subject to conditioning with appropriate best management practices to minimize impacts on the functions and values of wetlands:

(A) Outdoor passive recreational activities;

(B) Existing and ongoing agricultural activities (provided no additional area is added beyond demonstrated historic levels within the past five years). Agricultural activities in this section do not include the processing of agricultural products or other industrial aspects of agriculture.

(6) Maintenance of existing facilities, structures, ditches, roads and utility systems. All projects shall comply with the applicable federal, state and local regulations regarding the species.

(7) As determined through the site-specific study, mitigation measures shall be implemented that maintain the functions and values found in the particular wetland.

(8) As determined through the site-specific study, appropriate mitigation, management and monitoring plan(s) may be developed and implemented, with any necessary security to ensure compliance with such plan(s) being provided as described in SMC 11.50.080C(4)(j).

(9) A use or structure established prior to April 22, 2014 which does not conform to standards set forth herein is allowed to continue and be reasonably maintained; provided, that such activity or structure shall not be expanded or enlarged in any manner that increases the extent of its nonconformity.

(Ord. No. 1943, § 2, 4-8-14)

11.50.140 - Frequently flooded areas.

(a) Classification. The following classification system will be used to determine the level of protection necessary for frequently flooded areas:

(1) Class I. The floodway of any river or stream as designated by the Federal Emergency Management Agency (FEMA); and draws, alluvials and flood channels that are not mapped by FEMA but are areas of local concern that have a historical reoccurrence of flood events characterized by significant damage due to flood flows.

(2) Class II. All areas mapped by FEMA as a one hundred-year floodplain; and those areas of local concern that experience reoccurrence of flooding that are characterized by damage due primarily to inundation.

(b) Designation. The city designates the areas of special flood hazard (including special flood risk zones) in addition to the general provisions of this section and the requirements of the underlying zoning district, the following minimum standards shall apply to the development activities within and adjacent to wetland areas.

(c) Standards. In addition to the general provisions of these regulations and the requirements of the underlying zoning district, the following minimum standards shall apply to development activities within and adjacent to frequently flooded areas:

(1) All development within frequently flooded areas shall be reviewed under and subject to the requirements of the city of Selah's flood damage prevention regulations (SMC, Chapter 11.19), SMC.

(2) All development within frequently flooded areas shall be consistent with the goals, objectives, findings, and recommendations of the city's comprehensive land use plan and flood damage prevention plan. The flood damage prevention plan, along with the city's comprehensive land use plan, provides a policy basis for management of flood hazard areas.

(3) Where practical, development activities shall be coordinated with structural activities recommend in the flood damage prevention plan.

(4) Where frequently flooded areas coincide with other designated critical areas, critical areas reports and mitigation plans shall address any combined functions and values.

(5) In all cases where mitigation measures are proposed, said measures shall be consistent with the city's flood damage prevention plan.

(6) Filling and grading in frequently flooded areas shall occur only upon a determination by a qualified professional that the filling or grading will not increase flood hazards to others.

(7) Subdivision in frequently flooded areas will be subject to the following:

(A) All lots created shall have adequate building space outside flood hazard areas, including the floodway, one hundred-year floodplain, and channel migration zones;

(B) Plat maps shall indicate the floodway and/or the one hundred-year floodplain;

(C) Subdivisions shall be designed to minimize or eliminate the potential for flood damage; and

(D) Subdivisions shall provide for stormwater drainage, in accordance with city standards, so as to reduce exposure to flood hazards.

(8) Bank Stabilization Projects. Where consistent with other regulations and with the flood damage prevention plan, protection of structures, public roadways or sole access routes in existence before April 22, 2014 shall be allowed. Such projects shall be designed to minimize adverse impacts to property, public improvements, and ecological functions.

(Ord. No. 1943, § 2, 4-8-14)

11.50.150 - Geologically hazardous areas.

(a) Classification. Known geologically hazardous areas within the city of Selah consist of erosion hazard areas, including steep slopes. As more information is obtained that demonstrates the existence of other types and/or areas of geologically hazardous areas, these types and/or areas shall be classified and protected in accordance with the provisions of this section.

(1) The following general classification system will be used to determine the level of protection necessary for geologically hazardous areas, based upon the risk to development:

(A) Known or suspected risk;

(B) No risk;

(C) Risk unknown.

(2) The following criteria shall be used in determining the status of an area as a particular type of geologically hazardous area:

(A) Erosion hazard areas are those that contain all three of the following characteristics:

(i) A slope of fifteen percent or greater;

(ii) Soils identified by the Natural Resource Conservation Service (NRCS) as ~~unstable and~~ having a high ~~potential for~~ erosion hazard. The approximate location and extent of erosion hazard areas are shown on a Yakima County map titled "Erosion Hazard Areas of Yakima County" and for areas in Selah, were identified by using the "Soil Survey of Yakima County Area, Washington"; and

(iii) Areas that are exposed to the erosion effects of wind or water.

(B) Landslide hazard areas are those that may contain any of the following circumstances:

(i) All areas that have historically been prone to land sliding;

(ii) All areas containing soil types identified by the Natural Resource Conservation Service (NRCS) as unstable and prone to landslide hazard;

(iii) All areas that show evidence of or are at risk from snow avalanches; or

(iv) All areas that are potentially unstable as a result of rapid stream incision or stream bank erosion.

(b) Designations.

(1) Geologically Hazardous Areas. Each type of geologically hazardous area is designated based on different factors. The designation process for each type is as follows:

(2) Erosion Hazard Areas. NSCS soil erosion-hazard ratings are interpretations of the potential for erosion, applied to broadly generalized map units. They do not pinpoint erosion sites, but rather areas that, because of soil properties, availability of water, etc. The ~~SCS~~ NRCS maps will be used to identify areas of erosion potential. The soil information needs to be combined with site-specific information (rills, inter-rills, and wind erosion) to determine if an erosion hazard is present on the site. ~~The soil types that have erosion hazard potential have been identified within the Selah urban growth area in the county.~~

(3) Landslide Hazard Areas. Lands that meet the classification criteria are hereby designated as landslide hazard areas and should be mapped as resources become available.

(4) Mine Hazard Areas. Lands that meet the classification criteria are hereby designated as mine hazard areas and will be mapped as resources become available.

(5) Seismic Hazard Areas. There are no known active faults in the city of Selah. The majority of the city is located within Seismic Zone C in accordance with the International Building Code (2009 Edition, or as amended).

(6) Volcanic Hazard Areas. There are no volcanic hazard areas in the city of Selah. There are, however, several active volcanoes that could have impacts on the city, particularly the fallout of ash. There is no way to prevent the impacts of fallen ash, but there are ways to respond to the ash that could lessen its impacts.

(c) Standards. In addition to the general provisions of these regulations and the requirements of the underlying zoning district, the following minimum standards shall apply to development activities within and adjacent to geologic hazard areas:

(1) All projects shall be evaluated through a geotechnical report to determine whether the project is proposed to be located in a geologically hazardous area, and if so, what is the project's potential impact on the geologically hazardous area and the potential impact of the geologic hazard on the proposed project, except that if the project site is only in an erosion hazard area and not a potential geologically hazardous area of another type, the protection measures will be accomplished by implementing the regulatory standards for erosion and drainage control required under SMC Title 11 (Building Codes). Any future stormwater program erosion control measures that may be formally adopted by the City Council shall supersede SMC Title 11 erosion control requirements. Standards to meet SMC Title 11 requirements can be met by the application of the best management practices (BMP's) in the Eastern Washington Stormwater Manual (WDOE publication number 04-10-076) or equivalent manual adopted by the City of Selah, or any other approved manual deemed appropriate by the building official, including but not limited to applicable Natural Resource Conservation Service (NRCS) Field Office Technical Guide (FOTG) BMPs and the Washington Department of Transportation Highway Runoff Manual. Application of the Environmental Protection Agency (EPA) "Construction Rainfall Erosivity Waiver" is at the discretion of the building official on a case-by-case basis;

(2) All projects shall comply with the applicable federal, state and local regulations, including the most recently adopted International Building Code;

(3) Any ~~As determined through the site-specific study~~, appropriate buffers determined by the site specific study shall be maintained between all permitted uses and activities and the designated geologically hazardous area(s);

(4) The existing native vegetation within the buffer area(s) shall be maintained, except that normal, nondestructive pruning and trimming of vegetation for maintenance purposes is allowed;

(5) As determined through the site-specific study, appropriate drainage, grading, excavation and erosion control measures shall be implemented in the geologically hazardous area(s);

(6) As determined through the site-specific study, mitigation measures shall be implemented that maintain the integrity of the geologically hazardous area(s);

(7) As determined through the site-specific study, appropriate management and monitoring plan(s) shall be developed and implemented to preserve and protect both the geologically hazardous area(s) and the project, with any necessary surety to ensure compliance with such plan(s) being provided in SMC 11.50.080(c)(4)(J) (critical areas report); and

A use or structure established prior to April 22, 2014 which does not conform to standards set forth herein is allowed to continue and be reasonably maintained; provided, that such activity or structure shall not be expanded or enlarged in any manner that increases the extent of its nonconformity, unless otherwise approved.

(Ord. No. 1943, § 2, 4-8-14)

City of Selah

PLANNING DEPARTMENT

**Cingular Wireless PCS, LLC / AT&T Mobility / Ryka Consulting**

**915.95.16.01 Variance and Adjustment**

**List of Exhibits**

1. May 17, Staff Report for Variance (1)
2. May 17, Staff Report for Adjustment (1A)
3. Application for Variance (2)
4. Site Plan and Elevations as modified March 25, 2016 (3)
5. Emails between staff and applicant concerning application & tower location (4)
6. Surveys of project site (5)
7. Priority Habitat and Species Report (6)
8. Subject Property Map (6A)
9. Emails correspondence with Washington Department of Fish and Wildlife (7)
10. Subject Property map(8)
11. Aerial Photograph of the Site (9)
12. Notice of Application (10)
13. Affidavit of Publication (11)
14. Affidavit of Mailing (12)

Administrative Adjustment

15. Application for Administrative Adjustment (13)
16. Notice of Application (14)
17. Affidavit of Mailing (15)

**CITY OF SELAH PLANNING COMMISSION**

STAFF REPORT

May 17, 2016

**FILE NO.:** ZONING VARIANCE 915.95.16-01

**PROPOSAL:** Variance to allow the replacement of an existing 100'+/- communication tower with a new 101 foot tower. As an existing Class 3 use, the tower may be re-established as it previously existed if damaged or destroyed (SMC 10.02.050(c)). The tower is being relocated approximately 50 feet within the fenced and improved part of the site in order to minimize service interruptions during reconstruction. Since this is typical for this type of land use, it is being considered to be consistent with the requirement of being re-established as it existed previously. As a non-conforming structure, the tower must be brought into conformance with current development standards (SMC 10.36.040(a)). A variance is being required for the reconstructed tower to exceed the 35 foot height limit of the One Family Residential (R-1) zoning district.

**PROPONENT:** Cingular Wireless PCS, LLC, AT&T Mobility, Ryka Consulting

**PROPERTY OWNER:** Elltell Wireless, Inc. The communication facility is owned by the City of Yakima under a lease with the property owner. The City (Yakima) is subleasing the tower to applicants Cingular and AT&T.

**LOCATION:** On the summit of the ridge about 4,200 feet east of Lookout Point Road. (Tax Parcel Number: 181311-13004).

**APPLICATION AUTHORITY AND JURISDICTION**: Selah Municipal Code, Chapter 10.30.030 (Variances). SMC 10.02 and 10.06 as they pertain to Class 3 Uses. Communication towers are defined in Appendix A to Chapters 10.02 through 10.48 as "a structure upon which can be mounted a pole, mast, whip, antenna, or any combination thereof used for radio, television, cellular or microwave telecommunications, broadcast transmission or line-of-sight relay".

Communication Towers are listed as a Class 3 use in all zoning districts by Table 10.28A-11 and are subject to the standards and requirements of SMC 10.28.040(h). As an existing Class 3 use, the communication tower may be allowed to continue even though it has not been through the review procedures of the zoning ordinance and may not fully comply with the standards. It may be reestablished as it previously existed if damaged or destroyed.

As a nonconforming structure (SMC 10.36.020), a variance is required in order for the tower to exceed the 35 foot height limitation of the R-1 zone (SMC 10.36.020(a)).

**PUBLIC FACILITIES AND UTILITY SERVICES:** The only utilities serving the site are electrical power and telephone.



EXHIBIT 1

**ACCESS**: Access to the site is by an access easement improved with a dirt road that extends east from the end of Lookout Point Road and provides access to other communication towers in the vicinity. The application does not document a right of legal access. However, based on staff experience with another communication tower using this access road and the fact that the communication facility is existing, legal access to the site is presumed.

**LAND USE, ZONING& PHYSICAL CHARACTERISTICS OF THE SITE:** The siteis located at the summit ridge of Lookout Point and overlooks the City of Selah and the City of Yakima. It is a fenced 3,750 square foot area improved with the existing communication tower and associated structures. The site and all surrounding properties are zoned One-Family Residential (R-1) and designated Low Density Residential by the Future Land Use Map of the Comprehensive Plan.

Most of the surrounding land use is vacant land. There are two existing communication towers in the vicinity ranging from 150 to approximately 3,000 feet away from the site, and a third approved 35 foot high tower, 800 feet away from the site. The nearest residential areas are located on Lookout Point Road about 4,200 feet west of the site and in the vicinity of South 7th Street and Harris Avenue about the same distanceto the north. Other nearby structures and land uses include a City water reservoir about 4,000 feet west of the site and above-ground electric transmission lines.Steep slopes descend both to the north and to the south. The Naches River is at the bottom of the slope to the south and along with U.S. Highway 12 forms a physical boundary separating the Cities of Selah and Yakima.

**ENVIRONMENTAL REVIEW:** The project is categorically exempt from SEPA under WAC 197-11-800(25)(a) which exempts the replacement of existing equipment on existing or replacement towers that does not substantially change their physical dimensions. Under WAC 197-11-800(25)(b)(v), the proposal does not "substantially change the physical dimensions" because it does not increase the height of the tower by more than ten percent or 20 feet and equipment mounted on the tower does not protrude from the edge of the structure by more than 20 feet at the level of the appurtenance.

**CRITICAL AREAS:** The project site was evaluated for potentially being in two critical areas based on its location. Geologically hazardous areas include several categories, the most likely being "erosion hazard areas", which are areas that have three characteristics: A slope of 15% or greater, soils identified by the NRCS as unstable witha high potential for erosion; and areas that are exposed to the erosion effects of wind or water (SMC 11.50.150(a)(2)(A)). Slope on the site is less than 15%. The NRCS soil classification of the site is Starbuck-Rock outcrop complex which is not identified by the Soil Survey for Yakima County as being either unstable or having a high erosion potential. Mapping of erosion hazard areas maintained by Yakima County also does not show this site being in an effected area. There is no evidence that the site has any of the characteristics of the other geological hazardous areas identified in the critical areas ordinance.

The second potential critical area is Fish and Wildlife Conservation Areas (SMC 11.50.120) which is described as the areas identified by the Washington Department of Fish and Wildlife under the Priority Habitat and Species Program (SMC 11.50.120(a)). The first of two classifications for these areas is "Critical" meaning an area that state or federal endangered, threatened and sensitive species has a

primary association, including anadromous fish species and habitats requiring special consideration under RCW 36.70A.172(1). The second classification: "awareness" includes all other priority habitats and species identified by WDFW.

Mapping obtained from the WDFW website shows the site location very near but outside of the designated Shrub-Steppe Habitat Area. The Washington Department of Fish and Wildlife was consulted and states that the area is somewhat isolated from other shrub-steppe habitat areas and bordered by other development, so the project is not expected to have additional cumulative impact, especially since locating near existing towers. Recommendations are to place towers as close to existing towers as possible to reduce impacts to wildlife and minimize fire risk. Also revegetation of disturbed soils using native plant species to reduce the spread of noxious invasive weeds and fire safety practices to ensure that construction and maintenance of the tower does not lead to increased fire risk.

**DEVELOPMENT STANDARDS:** As an existing Class 3 use, the proposed structure may be replaced as it existed previously. As a structure that is non-conforming only because it does not meet current building area, height, setback or other development standards may be continued, remodeled or enlarged provided that any enlargement meets the current development standards (SMC 10.36.040). A lawfully established structure that is destroyed is required to meet applicable building area, height, setback and other development standards when restored, unless an administrative adjustment or variance is granted (SMC 10.36.020(a)). The structure is not being enlarged, so conformance to current development standards may not be required under SMC 10.36.040. But since the tower is being replaced, it may require conformance to SMC 10.36.020(a), so it was determined a variance should be required to exceed the 35 foot height limitation.

The tower also does not meet all of the principal structure setbacks (criterion #5), which in this case are 20 feet from the front and rear lot lines and 5 feet from the side lot lines (SMC 10.08.090, Table 8-3). The tower (as measured from the nearest leg of the structure) is 14 feet from the east property line. If shifted six feet to the west, it would be 20 feet and consistent with the standard. The determination of this line as the rear property line is based on the discretion given to the building official under the definition of "Lot Line, Front" to determine the front lot line. The rear lot line is, by definition, opposite and most distant from the front. The building official's determination of the front lot line is based on owner preference and public safety issues.

The equipment building and other accessory structures meet the accessory setback standards, with the possible exception of a diesel generator that is four feet from the property line. Since none of the accessory structures are being replaced under this application, they are allowed to continue as non-conforming structures of an existing Class 3 use.

**VARIANCE**: The requirements for a variance are that it is not contrary to the public interest and the comprehensive plan and where literal enforcement of the zoning standards would result in undue hardship. Other requirements are that the Planning Commission has the authority to impose conditions on an approval and that a variance cannot be granted to allow a use not permitted in the underlying zoning district or to allow density exceeding that allowed by the Comprehensive Plan. Neither is the

case for this proposal as indicated by SMC 10.28.040(h)(4) which expressly provides for the consideration of a height variance for a communication tower and that as a non-residential use, the density limitations of the comprehensive plan do not apply.

**Comprehensive Plan:** The Future Land Use designation of the site is Low Density Residential, which under the plan provides areas of residential development up to 5 dwelling units per gross acre. Clustering of units within the permitted density range is encouraged to preserve open space, steep slopes, drainageways, etc. It accommodates agriculture until such time as it is converted to residential use. The plan neither supports nor prohibits the location of communication towers, but they have been permitted in the R-1 zone through Class 3 Review by the zoning ordinance.

The following Comprehensive Plan goals, objectives and policies are or may be relevant to this proposal:

**Objective LUGM 4:** Assure that land use policies and patterns adequately protect and preserve resource lands, critical areas, water supplies, water bodies and other significant areas.

**Policy HSG 1.6:** Replace nonconforming uses with appropriate conforming uses.

**Goal: Provide appropriate protection for recognized habitat and critical areas**

**Policy ENV 4.3:** Support regional efforts for the protection of fish and wildlife habitat consistent with science-based criteria to protect the natural values and functions of those habitats. Fish and wildlife habitat protection considerations should include: 1).The physical and hydrological connections between different habitat types to prevent isolation of those habitats; 2). Diversity of habitat types both on a local and regional scale; 3). Large tracts of fish and wildlife habitat; 4). Areas of high species diversity; 5). Locally or regionally unique or rare habitats; 6). Winter range and migratory bird habitat of seasonal importance.

**Policy ENV 4.6:** Protect the habitat of *Washington State Listed Species of Concern and Priority Habitats and Species* in order to maintain their populations.

**Policy ENV 4.7:** Cooperate with resource agencies to prioritize habitats and provide appropriate measures to protect them according to their respective values.

The proposed use is only nonconforming with respect to its height, so it should not be considered to be an inappropriate use under Policy HSG 1.6 (which as a policy from the Housing Element of the plan may not be relevant to this action). Also under the Federal Telecommunications Act, siting of the tower may be allowed even if it does not meet local land use standards if established that there is a coverage gap in service and if demonstrated that there is no less intrusive alternative. These findings could also be considered unique circumstances to support approval of the variance.

Based on comments received from the Washington Department of Fish and Wildlife and other documentation in the record, the site is located near a priority habitat area, warranting protection

under Policy ENV 4.6, but the area is already somewhat isolated and of lower value. Appropriate measures have been identified and can be provided consistent with Policies ENV 4.3 and 4.7.

**The Public Interest:** The purpose of the R-1 zone is to provide for single-family residential development where urban governmental services are currently available or will be extended by the proponent to facilitate development at no public cost (SMC 10.12.010). Specific intents of 10.12.010 include providing for an orderly, phased transition from vacant or partially developed to single-family development and ensuring that R-1 uses will facilitate future urban development and extension of utilities. Communication towers are permitted Class 3 uses in the R-1 zone and there is no indication that the proposed use is contrary to these purposes and intents, especially since it is replacing an existing facility.

**Required Variance Criteria:**

1. **That special circumstances applicable to the subject property, including size, shape, topography, location or surroundings do exist:**

   The special circumstances that are applicable to the subject property are that the existing tower location is necessary to provide coverage in the public interest including public service telecommunications for the City of Yakima and public commercial telecommunication service. Also that the existing tower is now providing these public telecommunication services; reducing tower height could hamper or eliminate its ability to provide service to all of the existing entities and force them to locate elsewhere.

2. **That because of such special circumstances, strict application of this title would deprive the subject property of rights and privileges enjoyed by other properties in the vicinity under identical zoning district classification:**

   Requiring the tower to be less than the proposed height would hamper its ability to provide the telecommunication functions that are necessary and in the public interest and which are similar to services being provided by other towers in the vicinity.

3. **That the granting of the variance will not be materially detrimental to the public welfare or injurious to the property or improvements in the vicinity and zoning district classification in which the property is situated:**

   The surrounding R-1 zoned property is mostly undeveloped and the proposed tower is the replacement of a similar tower already in existence. The only improvements in the vicinity are other communication towers and limited utilities. Granting the variance may avoid creating a coverage gap and the necessity of public telecommunication service providers having to find another location to provide telecommunication services to the public.

4. **That the special circumstances do not result from the actions of the applicant:**

The locational characteristics of this site that make it superior for this use do not result from the actions of the applicant, and other locations in the vicinity that might have equal characteristics are under the same zoning.

5. **That the variance is the minimum variance that will make possible the reasonable use of the land, building or structure:**

   The variance allows the tower to be replaced at the same elevation as the existing facility. Reducing the height of the tower would likely reduce its ability to accommodate all of the entities that are now using it or to provide for additional co-location of communication facilities.

6. **That the granting of a variance will be in harmony with the general purpose and intent of this title, the specific zoning district and the comprehensive plan:**

   The variance does not substantially impact the R-1 zoning district and the land use is an allowed class 3 use. The proposal is consistent with the comprehensive plan because the existing facility is not a nonconforming land use and reasonable measures can be taken to protect the nearby priority habitat area, which is not of significant value. This tower is currently providing for co-location of communication facilities, which is consistent with this title and which is to be given preferential consideration where there is no height increase (SMC 10.28.040(h)(3)).

7. **That the administrative adjustment or administrative modification provisions of this chapter were either not applicable or were insufficient to provide the relief sought from the standards of this title:**

   These provisions were not applicable due to the following zoning ordinance provisions:

   a. Administrative adjustment may not be used to increase height standards (SMC 10.30.020(d)(2)).

   b. A variance is required to allow the increase in height of a communication tower beyond the standard of the underlying zoning district (SMC 10.28.040(h)(4)).

**RECOMMENDATION:** Approval subject to the following conditions.

1. Height limitation of 101 feet as shown by the application and substantial conformance to the site plan and elevations submitted with the application except as modified by this decision.

2. Consistent with the zoning ordinance requirements for camouflaging the tower, the tower shall not be painted red, white, or any other bright color but shall be painted gray, green or other darker color that blends with the surroundings. No lights shall be installed on the tower unless

the administrative official is provided with written documentation from the FAA, FCC or a State agency with jurisdiction over aviation that states specifically that such lighting is required on this tower.

3. Making the tower available for co-location of telecommunication facilities consistent with SMC 10.28.040(h)(3) is authorized and encouraged and the City shall not require additional zoning review for the addition of such facilities provided that they do not increase the height of the tower at the time of their installation.

4. Tower width shall not be increased beyond that shown in the site plan and elevations submitted with the application in order to reduce visual impact as required by the zoning ordinance.

5. Security lighting fixtures shall be shielded, directed or located to not shine on neighboring properties or to be visible from a distance.

6. New equipment buildings or other ground level appurtenances may be installed subject to compliance with the building code and subject to the following conditions:

    a. Conformance to zoning setbacks for accessory buildings.

    b. Painted or siding installed that is gray, green or other darker color that blends with the surroundings.

    c. They shall be located in the existing fenced area on the site as shown by the site plan.

7. Submittal of a pre-construction drainage plan and sediment control plan prior to building permit issuance. Special inspections for concrete and rebar will be required.

8. Soils disturbed during the project shall be revegetated using native plant species to reduce the spread of noxious invasive weeds.

9. Project shall be completed within one year of the final decision approving the variance. Completion includes the removal of the existing tower, which may occur after construction of the new tower has begun. Extensions may be requested as authorized by the zoning ordinance, but must be requested in writing prior to the completion date.

**CITY OF SELAH PLANNING COMMISSION**
SUPPLEMENTAL STAFF REPORT
May 17, 2016

**FILE NO.:** ZONING VARIANCE 915.95.16-01; ADMINISTRATIVE ADJUSTMENT...

**PROPONENT:** Cingular Wireless PCS, LLC, AT&T Mobility, Ryka Consulting

**AMENDED PROPOSAL:** In addition to the height variance being proposed, the application has been amended to include an administrative adjustment to allow the reduction of the 20 foot rear setback standard of the One Family Residential (R-1) zoning district. The tower (as measured from the nearest leg of the structure) is 14½ feet from the east property line and 9½ feet from the south property line. Regardless of which lot line is considered to be the rear, the 20 foot principal structural setback, a specific requirement for communication towers under SMC 10.28.040(h)(5), must be adjusted. The side setback standard is being met, regardless of which lot line it is considered to be measured from.

The reasons given by the applicant for the administrative adjustment include the small size of the parcel; the placement of other structures within the fenced project site; that the small parcel on which they are located was previously approved for this use and that adjacent properties also have telecommunication uses. The applicant states that the reduced setback would not significantly affect adjacent properties.

The size of the subject parcel is 75 feet by 50 feet (3,750 square feet) providing limited room to place the structures, which other than the tower, are not being substantially relocated or reconfigured. Based on records obtained from the Yakima County Assessor dating to 1987, the parcel was created by an exempt division, probably under RCW 58.17.040(8), for the purpose of leasing land for personal wireless services facilities, although staff has not determined this for certain. The owner of record of the subject property is Elltell Wireless, Inc. while the larger parcel from which it was segregated is shown by County records to be owned by Ellensburg Telephone Co., Inc. County records show the mailing addresses for these two entities to be the same. This is consistent with the creation of the small parcel for lease and suggests that both parcels are effectively part of a larger single property, being used for telecommunications (there is another communication tower on the larger parcel).

**DETERMINATION OF SIDE AND REAR LOT LINES:** The determination of which lot line is the rear property line, and which is the side is based on the definition of "Lot Line, Front" from Appendix A to Chapters 10.02 through 10.48. This definition states that generally the front lot line is the property line separating the lot from a street. "Street" in turn is defined by the Zoning Ordinance to mean a public or private right-of-way affording principal means of access to abutting property. The rear lot line is, by definition, opposite and most distant from the front. When there is uncertainty as to which lot line is the front, the determination is made by the Building Official based on owner preference and public safety issues.



EXHIBIT
tabbies
1A

In this relatively remote, undeveloped location, there does not seem to be any public safety factors that would dictate the preference to one lot line over the other. Nor has the applicant (or owner) indicated a preference. The property is served by a private road along its north line, indicating that it is the front lot line according to the zoning ordinance definition. The south line would be the rear lot line and the other two lot lines would be sides. Based on this determination, the setback adjustment would be 10½ feet allowing for a 9½ foot setback from the south lot line. At 14½ feet from the east property line, the side setback standard is being met.

**ADMINISTRATIVE ADJUSTMENT**: Some development standards may be administratively adjusted to accommodate the purpose and intent of the zoning district involved and flexibility of development (SMC 10.02.050(b)(2)). The standard may be adjusted or modified if the administrative official (the Planning Commission in this case) finds that it is consistent with the criteria of SMC 10.30.020(b)(1) through (5), that it is not one of the standards that cannot be adjusted under SMC 10.30.020(a) or (d) and that there are no other specific procedures and criteria provided for elsewhere in Title 10 to reduce or modify the standard (SMC 10.30.020(e)). Adjustment of the setback standard as proposed is not precluded under any of these provisions.

**Required Administrative Adjustment Criteria – The adjustment is consistent with:**

1. **The intent and purposes of the specific zoning district and the particular standard being adjusted.**

   There are no substantial impacts on the R-1 zoning district as a result of reducing the setback. The response to Variance Criterion #6 from the staff report is incorporated by reference to support this statement. The impact on the property adjoining the rear lot line is minimal because of its existing ownership, use, relatively remote location and the otherwise undeveloped nature of this and other surrounding properties.

   There is no intent statement given for setback standards, although they are usually required to provide privacy, light, air, emergency access, and in the case of front setbacks and setbacks that border streets, to provide separation from the street and to accommodate off-street parking. None of these factors are being compromised due to the remoteness of the site, lack of residential development, ownership and land use of the property adjacent to the rear lot line.

2. **Balancing the flexibility of the adjustment with the health, safety and general welfare of individual neighborhoods and the community.**

   The nearest individual neighborhoods are ¾ of a mile or more away from the site, far enough to not be meaningfully affected by a setback reduction for the tower. Any effect would be on future development permitted in the R-1 zone. Since the property bordering the site on the south is owned by and used for telecommunications, this effect would be limited to other surrounding properties which are all farther from proposed tower placement than required by setback standards.

3. **Coordinating development with adjacent land uses and the physical features of the site.**
   The proposed tower is being relocated on the site, rather than being replaced in its current location in order to reduce the interruption of service for telecommunication service providers. Due to the small size of the site, there is limited available space and it must avoid other facilities on-site that are not being relocated. The only adjacent land uses are other communication towers which would not be impacted by the proposed reconstruction.

4. **Maintaining the minimum adjustment necessary to accommodate the proposed use.**

   According to the applicant, the proposed location as shown on the site plan is necessary due to the small size of the site and the location and configuration of other existing improvements.

5. **The adjustment is of distinct and direct benefit to the adjoining property owners and the community at large.**

   The tower provides necessary telecommunications service to the community at large including service by public agencies. The tower could be sited under the Federal Telecommunications Act if shown that its denial would result in a gap in coverage. The tower provides for co-location of communication facilities, which is consistent with Title 10 and which is to be given preferential treatment where there is no height increase (SMC 10.28.040(h)(3)).

# CITY OF SELAH

## VARIANCE APPLICATION

Assigned File No. 915.95.16-01

APPLICATION REQUIREMENTS (print or type information)

Date Submitted/Received By: fee paid 2/5/16

☒ Non-Refundable Application Fee See SMC Title 20, Chapter 20.04.

☒ Site Plan (one copy, B&W, drawn to scale, maximum size 11" x17")

**THE APPLICATION AND REQUIRED SUBMITTALS MUST BE COMPLETED AND SUBMITTED BEFORE THE APPLICATION IS ACCEPTED AS COMPLETE BY THE CITY.**

APPLICANT'S NAME: New Cingular Wireless PCS, LLC / AT&T Mobility - on behalf of Ryka Consulting - Christine Contreras

APPLICANT'S ADDRESS: 918 S Horton St, Suite 1002 Seattle, WA 98134

Signature

TELEPHONE: (work) 206-523-1941 (home) N/A

NAME OF LEGAL PROPERTY OWNER: 3004 -ELLTEL Wireless 3005-Schwerdtfeger Revocable Living Trust
(If different from applicant)

ADDRESS:

N/A Ground lease provided. Tower owned by City of Yakima - City to retain ownership.
Signature

TELEPHONE: (work) (home)

Tax Parcel # 181311-13004 / 3005 Legal description of property:

* See Site Plan for full legal description

(attach if lengthy)

Zoning Classification: Class 3 - R-1 Comprehensive plan designa

EXHIBIT 2

at&t
Your world. Delivered.

MasTec

# SELAH

## 2.3 MILES SOUTHEAST CRUSHER CANYON
## SELAH, WA 98942
## YAKIMA COUNTY

# YA01

FA: 10098221 (2)

**NOTE:**
PER RFDS REV 3.0 DATED 03-27-15

## VICINITY MAP

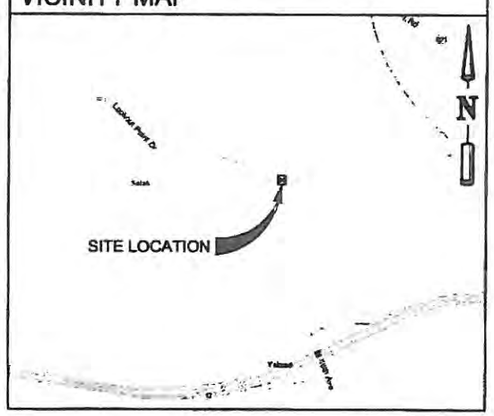


## GENERAL LOCATION MAP

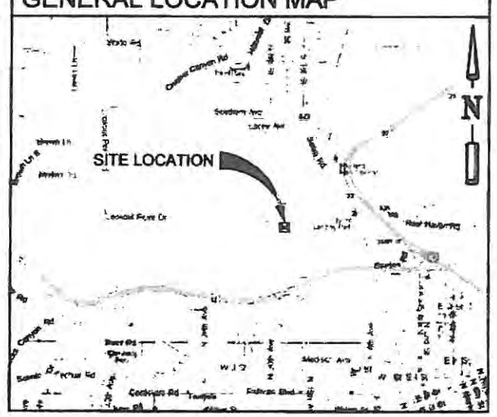


## APPROVAL/SIGN OFF OF DRAWINGS

| CONSULTANT | DATE | SIGNATURE |
|---|---|---|
| PROJECT MANAGER | | |
| CONSTRUCTION MANAGER | | |
| SITE ACQUISITION | | |
| LANDLORD'S REPRESENTATIVE | | |
| | | |

| CARRIER | DATE | SIGNATURE |
|---|---|---|
| PROJECT MANAGER | | |
| CONSTRUCTION MANAGER | | |
| RF ENGINEER | | |
| INTERCONNECT | | |
| OPERATIONS | | |
| COMPLIANCE | | |
| | | |

REVIEWERS SHALL **CLEARLY PLACE INITIALS** ADJACENT TO EACH REDLINE NOTE AS DRAWINGS ARE BEING REDLINED

## DRIVING DIRECTIONS

FROM NEW CINGULAR WIRELESS IN REDMOND, WA:
HEAD EAST ON NE 72nd WAY, GO 144 FT.
TURN RIGHT ONTO 164th AVE NE, GO 203 FT.
TURN RIGHT ONTO BEAR CREEK PKWY, GO 0.3 MI.
TURN LEFT ONTO LEARY WAY NE, GO 0.3 MI.
TURN SLIGHTLY LEFT TO MERGE ONTO WA-520 W, GO 0.4 MI.
MERGE ONTO WA-520 W, GO 4.6 MI.
TAKE I-405 S EXIT TOWARD RENTON, GO 0.2 MI.
MERGE ONTO I-405 S, GO 3.2 MI.
TAKE EXIT #11 TO MERGE ONTO I-90 E TOWARD SPOKANE, GO 101 MI.
TAKE EXIT #110 FOR I-82 E/US-97 S TOWARD YAKIMA, GO 1.1 MI.
CONTINUE ONTO I-82 E/US-97 S, GO 25.5 MI.
TAKE EXIT #26 FOR WA-821 N TOWARD SELAH, GO 0.3 MI.
TURN RIGHT ONTO WA-821 N, GO 0.2 MI.
TURN LEFT ONTO WA-823 S, GO 3.2 MI.
TURN RIGHT ONTO E NACHES AVE, GO 0.4 MI.
CONTINUE ONTO CRUSHER CANYON RD, GO 1.5 MI.
TURN LEFT ONTO LOOKOUT POINT RD, GO 0.8 MI.
TURN LEFT ONTO LOOKOUT POINT DR (GATE ACCESS REQ'D), GO 1.5 MI.
ARRIVE AT THE SITE ON THE RIGHT

## LEGAL DESCRIPTION

SEE SHEET A-1 FOR LEGAL DESCRIPTION

## PROJECT TEAM

**APPLICANT:**
NEW CINGULAR WIRELESS, LLC.
16221 NE 72nd WAY, RTC 3
P.O. BOX 97061
REDMOND, WA 98052

**PROJECT ENGINEER:** (1)
CORNERSTONE ENGINEERING, INC.
16928 WOODINVILLE-REDMOND RD N.E. STE 210
WOODINVILLE, WA 98072
MARK W OLSON, P.E.
(425) 487-1732

**PROJECT CONSULTANT:**
MASTEC
1203 114TH AVE SE
BELLEVUE, WA 98004
(425) 214-7000

**PROPERTY OWNER (PARCEL 3004)**
ELLTEL WIRELESS INC
TBD

**PROPERTY OWNER (PARCEL 3005)**
SCHWERDTFEGER REVOCABLE LIVING TRUST
TBD

**TOWER OWNER:**
CITY OF YAKIMA
129 N 2ND ST
YAKIMA, WA 98901
(509) 575-6048 (2)

**PROJECT LEAD:**
DANIEL KELLY
(425) 214-9749
daniel.kelly@mastec.com

**CONSTRUCTION MANAGER:**
RON EVENSON
(206) 550-9322
revenson@mastec.com

(1) **SITE ACQUISITION / ZONING:**
CHRISTINE CONTRERAS
(206) 523-1941
ccontreras@rykaconsulting.com

**PERMITTING:**
CHRISTINE CONTRERAS
(206) 523-1941
ccontreras@rykaconsulting.com

**RF ENGINEER:**
KEN MOTT
(206) 829-0075
kmott@mastec.com

## PROJECT INFORMATION

**CODE INFORMATION:** (1)
ZONING CLASSIFICATION: R1
BUILDING CODE: IBC 2012
CONSTRUCTION TYPE: V-B
OCCUPANCY: GROUP U
JURISDICTION: CITY OF SELAH
PROPOSED BUILDING USE: TELECOMM

**SITE LOCATION (BASED ON NAD 83):**
LATITUDE: 46° 37' 49.74" N (46.630484)
LONGITUDE: 120° 32' 05.75" W (-120.534932)
TOP OF STRUCTURE: 101.0' (TOWER & FOUNDATION)
BASE OF STRUCTURE: ±1,769.0' AMSL

(4) **PARCEL NUMBER:**
18131113004

**AREA OF PARCEL:**
±3,750 SQ. FT. (±0.08 ACRES)

**PROJECT AREA:**
±185 SQ. FT. (EQUIPMENT AREA)

**NEW IMPERVIOUS AREA:**
0 SQ. FT.

**GENERAL INFORMATION:**
1. PARKING REQUIREMENTS ARE UNCHANGED. (NON ASSIGNED TECH PARKING)
2. TRAFFIC IS UNAFFECTED.

## DRAWING INDEX

| DWG | DESCRIPTION |
|---|---|
| T-1 | TITLE SHEET |
| G-1 | GENERAL NOTES |
| A-1 | SITE PLAN |
| A-1.1 | EXISTING ENLARGED SITE PLAN |
| A-1.2 | PROPOSED ENLARGED SITE PLAN |
| A-1.3 | EXISTING & PROPOSED SHELTER PLANS |
| A-2 | EXISTING & PROPOSED NORTHEAST ELEVATIONS |
| A-3 | DETAIL SHEET |
| A-3.1 | DETAIL SHEET |
| A-4 | CONSTRUCTION DETAILS |
| RF-1 | ANTENNA PLANS & SCHEDULES |
| E-1 | SCHEMATIC GROUNDING PLAN |
| E-1.1 | GROUNDING DETAILS |

## BY OTHERS (2)

| DWG | DESCRIPTION |
|---|---|
| C1 | 100' EHRESHMAN SELF SUPPORT TOWER |
| E01 | SPREAD FOOTING FOUNDATION 100' EEI SSTA |
| E02 | FOUNDATION AND TEMPLATES |

## PROJECT DESCRIPTION

- REPLACE & RELOCATE (1) 100' HIGH LATTICE TOWER (BY ERSHMANN ENGINEERING INC) (1)
- REPLACE & RELOCATE (9) PANEL ANTENNAS
- REPLACE & RELOCATE (6) TMA'S
- REPLACE & RELOCATE ALL ANTENNA MOUNTING HARDWARE
- REPLACE ALL COAX CABLES
- REPLACE & RELOCATE(1) ICE BRIDGE
- RELOCATE (6) REMOTE RADIO HEADS (RRH)
- RELOCATE (1) SURGE SUPPRESSION DISTRIBUTION UNIT
- RELOCATE (E) MICROWAVE ANTENNA
- ADD (3) PANEL ANTENNAS
- ADD (6) REMOTE RADIO HEADS (RRH)
- ADD (1) SURGE SUPPRESSION DISTRIBUTION UNIT
- ADD (6) DIPLEXERS
- ADD (2) POWER CABLES
- ADD (1) FIBER CABLE
- ADD (1) FIBER SLACK BOX
- ADD (1) DC12 SURGE PROTECTION UNIT
- ADD RED AND WHITE PAINT PER FAA GUIDELINES

at&t
Your world. Delivered.

PLANS PREPARED BY:


CORNERSTONE ENGINEERING, INC
16928 WOODINVILLE-REDMOND RD NE, SUITE 210
WOODINVILLE, WA 98072
PHONE: 425.487.1732
EMAIL: cei@cornerstone-engr.com
WWW.CORNERSTONE-ENGR.COM


PROJECT INFO:
YA01
SELAH
2.3 MILES SOUTHEAST CRUSHER CANYON
SELAH, WA 98942
YAKIMA COUNTY

ISSUED FOR:
CONSTRUCTION

| REV: | DATE: | ISSUED FOR: | BY: |
|---|---|---|---|
| 5 | 03-25-16 | REVIEW COMMENTS | AJB |
| 4 | 02-29-16 | PER COMMENTS | LJS |
| 3 | 02-01-16 | FINAL, PER CITY COMMENTS | LJS |
| 2 | 01-18-16 | FINAL, PER CLIENT REVISION | DRA |

| DRAWN BY: | CHK.: | APV.: |
|---|---|---|
| JRF | MWO | MWO |

CURRENT ISSUE DATE:
03-25-16

LICENSURE:
MARK WESLEY OLSON, STATE OF WASHINGTON, 32204, REGISTERED PROFESSIONAL ENGINEER
3/25/16

JURISDICTIONAL APPROVAL:
EXHIBIT 3
tabbies

PROPRIETARY INFORMATION:

DO NOT SCALE DRAWINGS. CONTRACTOR MUST VERIFY ALL DIMENSIONS AND ADVISE CONSULTANTS OF ANY ERRORS AND OMISSIONS. ALL PREVIOUS ISSUES OF THIS DRAWING ARE SUPERSEDED BY THE LATEST REVISION. THE INFORMATION CONTAINED IN THIS SET OF DOCUMENTS IS PROPRIETARY BY NATURE. ANY USE OR DISCLOSURE OTHER THAN WHICH IS RELATED TO NAMED CLIENT IS STRICTLY PROHIBITED.


DRAWING TITLE:
TITLE SHEET

DRAWING NUMBER:
T-1 5

CEI JOB NUMBER: LTE 3C/4C 14-13046

## GENERAL NOTES:

1. DRAWINGS ARE NOT TO BE SCALED, WRITTEN DIMENSIONS TAKE PRECEDENCE, THIS SET OF DOCUMENTS IS INTENDED TO BE USED FOR DIAGRAMMATIC PURPOSES ONLY, UNLESS NOTED OTHERWISE. THE GENERAL CONTRACTOR'S SCOPE OF WORK SHALL INCLUDE FURNISHING ALL MATERIALS, EQUIPMENT, LABOR, AND ANY REQUIREMENTS DEEMED NECESSARY TO COMPLETE PROJECT AS DESCRIBED IN THE DRAWINGS AND OWNER'S PROJECT MANUAL.
2. PRIOR TO THE SUBMISSION OF BIDS, CONTRACTORS INVOLVED SHALL VISIT THE JOB SITE TO FAMILIARIZE THEMSELVES WITH ALL CONDITIONS AFFECTING THE PROPOSED PROJECT. CONTRACTORS SHALL VISIT THE CONSTRUCTION SITE WITH THE CONSTRUCTION/CONTRACT DOCUMENTS TO VERIFY FIELD CONDITIONS AND CONFIRM THAT THE PROJECT WILL BE ACCOMPLISHED AS SHOWN. PRIOR TO PROCEEDING WITH CONSTRUCTION, ANY ERRORS, OMISSIONS, OR DISCREPANCIES SHALL BE BROUGHT TO THE ATTENTION OF THE ARCHITECT/ENGINEER VERBALLY AND IN WRITING.
3. THE ARCHITECTS/ENGINEERS HAVE MADE EVERY EFFORT TO SET FORTH IN THE CONSTRUCTION AND CONTRACT DOCUMENTS THE COMPLETE SCOPE OF WORK. CONTRACTORS BIDDING THE JOB ARE NEVERTHELESS CAUTIONED THAT MINOR OMISSIONS OR ERRORS IN THE DRAWINGS AND OR SPECIFICATIONS SHALL NOT EXCUSE SAID CONTRACTOR FROM COMPLETING THE PROJECT AND IMPROVEMENTS IN ACCORDANCE WITH THE INTENT OF THESE DOCUMENTS. THE BIDDER SHALL BEAR THE RESPONSIBILITY OF NOTIFYING (IN WRITING) THE ARCHITECT/ENGINEER OF ANY CONFLICTS, ERRORS, OR OMISSIONS PRIOR TO SUBMISSION OF CONTRACTOR'S PROPOSAL. IN THE EVENT OF DISCREPANCIES THE CONTRACTOR SHALL PRICE THE MORE COSTLY OR EXTENSIVE WORK, UNLESS DIRECTED OTHERWISE.
4. THE CONTRACTOR SHALL SUPERVISE AND DIRECT THE PROJECT DESCRIBED IN THE CONTRACT DOCUMENTS. THE CONTRACTOR SHALL BE SOLELY RESPONSIBLE FOR ALL CONSTRUCTION MEANS, METHODS, TECHNIQUES, SEQUENCES, AND PROCEDURES FOR COORDINATING ALL PORTIONS OF THE WORK UNDER THE CONTRACT.
5. THE CONTRACTOR SHALL INSTALL ALL EQUIPMENT AND MATERIALS ACCORDING TO MANUFACTURER'S/VENDOR'S SPECIFICATIONS UNLESS NOTED OTHERWISE OR WHERE LOCAL CODES OR ORDINANCES TAKE PRECEDENCE.
6. ALL WORK PERFORMED ON THE PROJECT AND MATERIALS INSTALLED SHALL BE IN STRICT ACCORDANCE WITH ALL APPLICABLE CODES, REGULATIONS, AND ORDINANCES. CONTRACTOR SHALL GIVE ALL NOTICES AND COMPLY WITH ALL LAWS, ORDINANCES, RULES, REGULATIONS AND LAWFUL ORDERS OF ANY PUBLIC AUTHORITY, MUNICIPAL AND UTILITY COMPANY SPECIFICATIONS, AND LOCAL AND STATE JURISDICTIONAL CODES BEARING ON THE PERFORMANCE OF THE WORK.
7. GENERAL CONTRACTOR SHALL PROVIDE, AT THE PROJECT SITE, A FULL SET OF CONSTRUCTION DOCUMENTS UPDATED WITH THE LATEST REVISIONS AND ADDENDA OR CLARIFICATIONS FOR USE BY ALL PERSONNEL INVOLVED WITH THE PROJECT. THIS SET IS A VALID CONTRACT DOCUMENT ONLY IF THE TITLE SHEET IS STAMPED "FOR CONSTRUCTION" AND EACH SUCCESSIVE SHEET BEARS THE ARCHITECT'S SIGNED WET STAMP.
8. THE STRUCTURAL COMPONENTS OF ADJACENT CONSTRUCTION OR FACILITIES ARE NOT TO BE ALTERED BY THIS CONSTRUCTION PROJECT UNLESS NOTED OTHERWISE.
9. SEAL ALL PENETRATIONS THROUGH FIRE-RATED AREAS WITH U.L. LISTED OR FIRE MARSHALL APPROVED MATERIALS IF APPLICABLE TO THIS FACILITY AND OR PROJECT SITE.
10. CONTRACTOR TO PROVIDE A PORTABLE FIRE EXTINGUISHER WITH A RATING OF NOT LESS THAN 2-A OR 2-A10BC WITHIN 75 FEET TRAVEL DISTANCE TO ALL PORTIONS OF PROJECT AREA DURING CONSTRUCTION.
11. CONTRACTOR SHALL MAKE NECESSARY PROVISIONS TO PROTECT EXISTING IMPROVEMENTS, EASEMENTS, PAVING, CURBING, ETC. DURING CONSTRUCTION. UPON COMPLETION OF WORK, CONTRACTOR SHALL REPAIR ANY DAMAGE THAT MAY HAVE OCCURRED DUE TO CONSTRUCTION ON OR ABOUT THE PROPERTY.
12. CONTRACTOR SHALL KEEP GENERAL WORK AREA CLEAN AND HAZARD FREE DURING CONSTRUCTION AND DISPOSE OF ALL DIRT, DEBRIS, AND RUBBISH. CONTRACTOR SHALL REMOVE EQUIPMENT NOT SPECIFIED AS REMAINING ON THE PROPERTY OR PREMISES. SITE SHALL BE LEFT IN CLEAN CONDITION AND FREE FROM PAINT SPOTS, DUST, OR SMUDGES OF ANY NATURE.
13. THE GENERAL CONTRACTOR SHALL RECEIVE WRITTEN AUTHORIZATION TO PROCEED WITH CONSTRUCTION PRIOR TO STARTING WORK ON ANY ITEM NOT CLEARLY DEFINED BY THE CONSTRUCTION DRAWINGS/CONTRACT DOCUMENTS.
14. THE CONTRACTOR SHALL PERFORM WORK DURING OWNER'S PREFERRED HOURS TO AVOID DISTURBING NORMAL BUSINESS.
15. THE CONTRACTOR SHALL PROVIDE THE CLIENT PROPER INSURANCE CERTIFICATES NAMING CLIENT AS ADDITIONAL INSURED, AND CLIENT PROOF OF LICENSE(S) AND PE & PD INSURANCE.
16. CONTRACTOR SHALL BE RESPONSIBLE FOR SCHEDULING AND COORDINATING ALL INSPECTIONS.
17. CAUTION! CALL BEFORE YOU DIG! BURIED UTILITIES EXIST IN THE AREA AND UTILITY INFORMATION SHOWN MAY NOT BE COMPLETE. CONTACT THE ONE-CALL UTILITY LOCATE SERVICE A MINIMUM OF 48 HOURS PRIOR TO CONSTRUCTION. DIAL 811.
18. CONTRACTOR TO DOCUMENT ALL WORK PERFORMED WITH PHOTOGRAPHS AND SUBMIT TO CLIENT ALONG WITH REDLINED CONSTRUCTION SET.
19. CONTRACTOR TO DOCUMENT ALL CHANGES MADE IN THE FIELD BY MARKING UP (REDLINING) THE APPROVED CONSTRUCTION SET AND SUBMITTING THE REDLINED SET TO THE CLIENT UPON COMPLETION.
20. FOR COLLOCATION SITES. CONTACT TOWER OWNER REPRESENTATIVE FOR PARTICIPATION IN BID WALK.
21. GENERAL CONTRACTOR IS TO COORDINATE ALL POWER INSTALLATION WITH POWER COMPANY AS REQUIRED. CONTRACTOR TO REPORT POWER INSTALLATION COORDINATION SOLUTION(S) TO NETWORK CARRIER REPRESENTATIVE, PROJECT CONSTRUCTION MANAGER AND ARCHITECT.
22. ANY SUBSTITUTIONS OF MATERIALS AND/OR EQUIPMENT, MUST BE APPROVED BY CLIENT CONSTRUCTION MANAGER.
23. IN THE CASE OF ROOFTOP SOLUTIONS FOR EQUIPMENT AND/OR ANTENNA FRAMES WHERE PENETRATION OF EXISTING ROOFING MATERIALS OCCUR, THE GENERAL CONTRACTOR SHALL COORDINATE WITH BUILDING OWNER AND BUILDING ROOFING CONTRACTOR OF RECORD FOR INSTALLATION, PATCH, REPAIR OR ANY AUGMENTATION TO THE ROOF, AND HAVE THE WORK GUARANTEED UNDER THE ROOFING CONTRACTOR'S WARRANTY FOR MOISTURE PENETRATION OR AND OTHER FUTURE BREACH OF ROOFING INTEGRITY.
24. IN THE CASE OF ROOFTOP SOLUTIONS WITH THE INSTALLATION OF ANTENNAS WITHIN CONCEALED (SHROUDED) SUPPORT FRAMES OR TRIPODS, THE GENERAL CONTRACTOR SHALL COORDINATE WITH THE FRP DESIGNER/FABRICATOR TO ENSURE THAT THE FINAL FRP SHROUD IS SIMULATING (IN APPEARANCE) DESIGNATED EXISTING EXTERIOR BUILDING FACADE MATERIALS, TEXTURES, AND COLORS. THE CONTRACTOR SHALL FURTHERMORE ENSURE THE USE OF COUNTERSUNK FASTENERS IN ALL FRP CONSTRUCTION. WHEN PHOTO SIMULATIONS ARE PROVIDED, THE CONTRACTOR SHALL ENSURE THAT FINAL CONSTRUCTION REPRESENTS WHAT IS INDICATED IN PHOTO SIMULATIONS. SHOP DRAWINGS SHALL BE PROVIDED TO THE GENERAL CONTRACTOR, CONSTRUCTION COORDINATOR, AND ARCHITECT PRIOR TO FABRICATION AND CONSTRUCTION.
25. IN THE CASE OF ROOFTOP SOLUTIONS FOR EQUIPMENT AND/OR ANTENNA FRAMES WHERE ANCHORING TO A CONCRETE ROOF SLAB IS REQUIRED, CONTRACTORS SHALL CONFIRM (PRIOR TO SUBMITTING BID) WITH CONSULTING CONSTRUCTION COORDINATOR AND ARCHITECT THE PRESENCE OF POST TENSION TENDONS WITHIN THE ROOF SLAB - RESULTING FROM AN UNDOCUMENTED DESIGN CHANGE IN THE EXISTING BUILDING "AS-BUILT DRAWING SET" - HAVING INDICATED AN ORIGINAL DESIGN SOLUTION OF REINFORCED CONCRETE W/ EMBEDDED STEEL REBAR. IN THE EVENT POST TENSION SLAB SOLUTION IS PRESENT, CONTRACTOR SHALL INCLUDE PROVISIONS FOR X-RAY PROCEDURES (INCLUDED IN BID) FOR ALL PENETRATION AREAS WHERE ANCHORING OCCURS.
26. GENERAL & SUB CONTRACTORS SHALL USE STAINLESS STEEL METAL LOCKING TIES FOR ALL CABLE TRAY TIE DOWNS AND ALL OTHER GENERAL TIE DOWNS (WHERE APPLICABLE). PLASTIC ZIP TIES SHALL NOT BE PERMITTED FOR USE ON CLIENT PROJECTS. RECOMMENDED MANUFACTURE SHALL BE: PANDUIT CORP. METAL LOCKING TIES MODEL NO. ML48-CP UNDER SERIES-304 (OR EQUAL). PANDUIT PRODUCT DISTRIBUTED BY TRIARC OF TACOMA, WA.

## DESIGN CRITERIA:

THE STRUCTURAL DESIGN OF THIS PROJECT IS IN ACCORDANCE WITH THE INTERNATIONAL BUILDING CODE 2012 WITH WASHINGTON STATE BUILDING CODE AMENDMENTS (IBC 2012)

DESIGN LOADS:

DESIGN DATA FOR CITY OF SELAH, WA

| | |
|---|---|
| -ROOF SNOW LOAD | N/A (NOT A ROOFTOP SOLUTION) |
| -BASIC WIND SPEED | 110 MPH (3 SEC GUST) |
| -WIND EXPOSURE | B |

## CODE COMPLIANCE:

ALL WORK AND MATERIALS SHALL BE PERFORMED AND INSTALLED IN ACCORDANCE WITH THE CURRENT EDITIONS OF THE FOLLOWING CODES AS ADOPTED BY THE LOCAL GOVERNING AUTHORITIES NOTHING IN THESE PLANS IS TO BE CONSTRUCTED TO PERMIT WORK NOT CONFORMING TO THESE CODES.

| | |
|---|---|
| BUILDING/DWELLING CODE | IBC 2012 (STATE BUILDING CODE, WAC CHAPTER 51-50)<br>IRC 2012 (STATE BUILDING CODE, WAC CHAPTER 51-51) |
| STRUCTURAL CODE | IBC 2012 (STATE BUILDING CODE, WAC CHAPTER 51-50) |
| PLUMBING CODE | UPC 2012 (STATE BUILDING CODE, WAC CHAPTER 51-56 AND 51-57) |
| MECHANICAL CODE | IMC 2012 (STATE BUILDING CODE, WAC CHAPTER 51-52) |
| ELECTRICAL CODE (WAC) 296-46B | NEC 2008 (LAWS, RULES & REG. FOR INSTALLING EL. WIRES & EQUIP. |
| FIRE/LIFE SAFETY CODE | IFC 2012 (STATE BUILDING CODE, WAC CHAPTER 51-54 |

FACILITY IS UNMANNED AND NOT FOR HUMAN HABITATION. HANDICAPPED ACCESS REQUIREMENTS ARE NOT REQUIRED IN ACCORDANCE WITH THE 2012 IBC BUILDING CODE.

## CONCRETE NOTES:

1. ALL CONCRETE CONSTRUCTION SHALL BE IN ACCORDANCE WITH ACI-318.
2. CONCRETE SHALL BE MIXED, PROPORTIONED, CONVEYED AND PLACED IN ACCORDANCE WITH CHAPTER 19 OF THE IBC 2012. STRENGTHS AT 28 DAYS AND MIX CRITERIA SHALL BE AS FOLLOWS.

| TYPE OF CONSTRUCTION | 28 DAY STRENTHS (f'c) | W/C RATIO | MINIMUM CEMENT CONTENT PER CUBIC YARD |
|---|---|---|---|
| A. SLABS ON GRADE TOPPING SLABS CONCRETE PIERS | 2,500 PSI | ≤ 0.45 | 5 SACKS |
| B. ALL STRUCTURAL CONCRETE EXCEPT WALLS | 4,000 PSI | ≤ 0.45 | 6 1/2 SACKS |
| C. CONCRETE WALLS | 4,000 PSI | ≤ 0.45 | 6 1/2 SACKS |

CEMENT SHALL BE ASTM C150, PORTLAND CEMENT TYPE II U.N.O.

2. THE GENERAL CONTRACTOR SHALL SUPERVISE AND BE RESPONSIBLE FOR THE METHODS AND PROCEDURES OF CONCRETE PLACEMENT.
3. ALL CONCRETE WITH SURFACES EXPOSED TO STANDING WATER SHALL BE AIR-ENTRAINED WITH AN AIR-ENTRAINING AGENT CONFORMING TO ASTM C260, C494, C618, C989 AND C1017. TOTAL AIR CONTENT SHALL BE IN ACCORDANCE WITH TABLE 1904.2 OF THE IBC 2012.
4. REINFORCING STEEL SHALL CONFORM TO ASTM A615 (INCLUDING SUPPLEMENT S1), GRADE 60, fy=60,000 PSI. EXCEPTIONS: ANY BARS SPECIFICALLY SO NOTED ON THE DRAWINGS SHALL BE GRADE 40, fy=40,000 PSI. GRADE 60 REINFORCING BARS INDICATED ON DRAWINGS TO BE WELDED SHALL CONFORM TO ASTM A706. REINFORCING COMPLYING WITH ASTM A615(S1) MAY BE WELDED ONLY IF MATERIAL PROPERTY REPORTS INDICATING CONFORMANCE WITH WELDING PROCEDURES SPECIFIED IN A.W.S. D14 ARE SUBMITTED.
5. REINFORCING STEEL SHALL BE DETAILED (INCLUDING HOOKS AND BENDS) IN ACCORDANCE WITH ACI 315 AND 318. LAP ALL CONTINUOUS REINFORCEMENT AT LEAST 30 BAR DIAMETERS OR A MINIMUM OF 2'-0". PROVIDE CORNER BARS AT ALL WALL AND FOOTING INTERSECTIONS. LAP CORNER BARS AT LEAST 30 BAR DIAMETERS OR A MINIMUM OF 2'-0". LAP ADJACENT MATS OF WELDED WIRE FABRIC A MINIMUM OF 8" AT SIDES AND ENDS.
6. WELDED WIRE FABRIC SHALL CONFORM TO ASTM A-185.
7. SPIRAL REINFORCEMENT SHALL BE PLAIN WIRE CONFORMING TO ASTM A615, GRADE 60, fy=60,000 PSI.
8. NO BARS PARTIALLY EMBEDDED IN HARDENED CONCRETE SHALL BE FIELD BENT UNLESS SPECIFICALLY SO DETAILED OR APPROVED BY THE CONSULTANT.
10. CONCRETE PROTECTION (COVER) FOR REINFORCING STEEL SHALL BE AS FOLLOWS:

| | |
|---|---|
| - CONCRETE CAST AGAINST AND PERMANENTLY EXPOSED TO EARTH | 3" |
| - CONCRETE EXPOSED TO EARTH OR WEATHER<br>(#5 BARS OR LARGER)<br>(#5 BARS OR SMALLER) | <br>2"<br>1 1/2" |
| - CONCRETE NOT EXPOSED TO WEATHER OR IN CONTACT WITH GROUND<br>(SLABS, WALLS AND JOISTS) (#11 BARS AND SMALLER)<br>(BEAMS, COLUMNS) (PRIMARY REINFORCEMENT, TIES, STIRRUPS, SPIRALS) | <br>3/4"<br>1 1/2" |

11. BARS SHALL BE SUPPORTED ON CHAIRS OR DOBIE BRICKS.
12. ANCHOR BOLTS TO CONFORM TO ASTM A307.
13. NON-SHRINK GROUT SHALL BE FURNISHED BY AN APPROVED MANUFACTURER AND SHALL BE MIXED AND PLACED IN STRICT ACCORDANCE WITH THE MANUFACTURER'S PUBLISHED RECOMMENDATIONS. GROUT STRENGTH SHALL BE AT LEAST EQUAL TO THE MATERIAL ON WHICH IT IS PLACED (3,000 PSI MINIMUM).
14. ALL EXPANSION ANCHORS TO BE HILTI BRAND. ADHESIVE ANCHORS REQUIRE TESTING TO CONFIRM CAPACITY UNLESS WAIVED BY ENGINEER.

## STRUCTURAL STEEL NOTES:

1. SHOP DRAWINGS FOR STRUCTURAL STEEL SHALL BE SUBMITTED TO THE CONSULTANT FOR REVIEW PRIOR TO FABRICATION.
2. STRUCTURAL STEEL DESIGN, FABRICATION AND ERECTION (INCLUDING FIELD WELDING, HIGH STRENGTH FIELD BOLTING, EXPANSION BOLTS, AND THREADED EXPANSION ANCHORS) SHALL BE BASED ON THE A.I.S.I. "SPECIFICATION FOR THE DESIGN, FABRICATION, AND ERECTION OF STRUCTURAL STEEL FOR BUILDINGS" LATEST EDITION. SUPERVISION SHALL BE IN ACCORDANCE WITH IBC 2012 CHAPTER 22. BY A QUALIFIED TESTING AGENCY DESIGNATED BY THE CONSULTANT. THE CONSULTANT SHALL BE FURNISHED WITH A COPY OF ALL INSPECTION REPORTS AND TEST RESULTS.
3. STRUCTURAL STEEL SHALL CONFORM TO THE FOLLOWING REQUIREMENTS:

TYPE OF MEMBER

| | | |
|---|---|---|
| A. | WIDE FLANGE SHAPE | ASTM A992, Fy 50 KSI |
| B. | OTHER SHAPE, PLATES AND ROD | ASTM A36, Fy 36 KSI |
| C. | PIPE COLUMNS | ASTM A53, Fy 35 KSI |
| D. | STRUCTURAL TUBING | ASTM A500, Fy 46 KSI |
| E. | ANCHOR BOLTS | ASTM A307 |
| F. | CONNECTION BOLTS | ASTM A325 |

4. ALL MATERIAL TO BE HOT DIPPED GALVANIZED AFTER FABRICATION PER A123/A123M-13.
5. ALL WELDING SHALL BE IN CONFORMANCE WITH A.I.S.I. AND AWS STANDARDS AND SHALL BE PERFORMED BY W.A.B.O. CERTIFIED WELDERS USING E70 XX ELECTRODES. ONLY PREQUALIFIED WELDS (AS DEFINED BY AWS) SHALL BE USED. WELDING OF GRADE 60 REINFORCING BARS (IF REQUIRED) SHALL BE PERFORMED USING LOW HYDROGEN ELECTRODES. WELDING OF GRADE 40 REINFORCING BARS (IF REQUIRED) SHALL BE PERFORMED USING E70 XX ELECTRODES. WELDING WITHIN 4" OF COLD BENDS IN REINFORCING STEEL IS NOT PERMITTED. SEE REINFORCING NOTE FOR MATERIAL REQUIREMENTS OF WELDED BARS.
6. COLD-FORMED STEEL FRAMING MEMBERS SHALL BE OF THE SHAPE, SIZE, AND GAGE SHOWN ON THE PLANS. PROVIDE MINIMUM SECTION PROPERTIES INDICATED. ALL COLD-FORMED STEEL FRAMING SHALL CONFORM TO THE A.I.S.I. "SPECIFICATION FOR THE DESIGN OF COLD-FORMED STEEL STRUCTURAL MEMBERS."
7. BOLTED CONNECTIONS SHALL USE BEARING TYPE ASTM A325 BOLTS (3/4" DIA.) AND SHALL HAVE A MINIMUM OF TWO BOLTS UNLESS NOTED OTHERWISE.
8. NON-STRUCTURAL CONNECTIONS FOR STEEL GRATING MAY USE 5/8" DIA. ASTM A307 BOLTS UNLESS NOTED OTHERWISE.
9. ALL STEEL WORK SHALL BE PAINTED IN ACCORDANCE WITH THE DESIGN & CONSTRUCTION SPECIFICATION AND IN ACCORDANCE WITH ASTM A36 UNLESS NOTED OTHERWISE.
10. ALL WELDS TO BE 1/4" FILLET UNLESS NOTED OTHERWISE
11. TOUCH UP ALL FIELD DRILLING AND WELDING WITH 2 COATS OF GALVACON (ZINC RICH PAINT) OR APPROVED EQUAL.

## TOWER/POLE NOTES:

1. VERIFICATION THAT THE PROPOSED TOWER/POLE CAN SUPPORT THE PROPOSED ANTENNA LOADING IS TO BE DONE BY OTHERS.
2. PROVIDE SUPPORTS FOR THE ANTENNA COAX CABLES TO THE ELEVATION OF ALL INITIAL AND FUTURE ANTENNAS. ANTENNA COAX CABLES ARE TO BE SUPPORTED AND RESTRAINED AT THE CENTERS SUITABLE TO THE MANUFACTURER'S REQUIREMENTS.

## ABBREVIATED ROOFTOP SAFETY PROCEDURES (WHEN APPLICABLE):

(AS PER "ACCIDENT PREVENTION PROGRAM" - BY PERMISSION OF WREN CONSTRUCTION, INC. - 03/01/09)

FALL PROTECTION METHODS AND EQUIPMENT
ROOF TOP INSTALLATIONS

1. FOR WORK IS BEING PERFORMED WITHIN 25' OF AN UNPROTECTED ROOF EDGE, THE CONSTRUCTION SUPERVISOR SHALL DESIGNATE A TRAINED SAFETY MONITOR TO OBSERVE THE MOVEMENTS AND ACTIVITIES OF THE CONSTRUCTION WORKERS.
2. SAFETY MONITOR SHALL WARN CONSTRUCTION WORKERS OF HAZARDS (I.E., BACKING UP TOWARD A ROOF EDGE, ETC.) OR UNSAFE ACTIVITIES. THE SAFETY MONITOR MUST BE ON THE SAME ROOF AND WITHIN VISUAL AND VERBAL DISTANCE OF THE CONSTRUCTION WORKERS.
3. CONSTRUCTION INVOLVING WORKERS TO APPROACH WITHIN 6' OR LESS OF AN UNPROTECTED ROOF EDGE, REQUIRES WORKERS TO USE SAFETY LINE.
4. SAFETY LINE SHALL BE MINIMUM ½" DIAMETER NYLON, WITH A NOMINAL TENSILE STRENGTH OF 5400 LBS.
5. SAFETY LINE SHALL BE ATTACHED TO A SUBSTANTIAL MEMBER OF THE STRUCTURE.
6. SAFETY LINE LENGTH SHALL BE SET ALLOWING CONSTRUCTION WORKER TO REACH EDGE OF ROOF, BUT NOT BEYOND.
7. SAFETY BELTS SHALL BE WORN BY ALL CONSTRUCTION WORKERS.
8. MONTHLY SAFETY INSPECTION AND MAINTENANCE OF THE FALL PROTECTION EQUIPMENT SHALL OCCUR BY THE SAFETY COMMITTEE REPRESENTATIVES, INCLUDING:

   INSPECTION OF CONSTRUCTION AREA FOR HAZARDS
   USE OF AN INSPECTION CHECKLIST
   INTERVIEWING COWORKERS REGARDING SAFETY CONCERNS
   REPORTING AND DOCUMENTING ANY HAZARDS
   REPORTING HAZARDS TO THE SAFETY COMMITTEE FOR CONSIDERATION
   POSTING RESULTS OF INSPECTION AND ANY ACTION TAKEN
   RECEIVING AN UNBIASED REVIEW OF ONE'S OWN WORK AREA BY ANOTHER COWORKER SAFETY REPRESENTATIVE

REFER TO ROOFTOP WORK AREA SAFETY PROTOCOL
NATIONAL ASSOCIATION OF TOWER ERECTORS 2000 PUBLICATION

REFERENCED OSHA REGULATIONS/STANDARDS SHALL BE REVIEWED BY TOWER ERECTORS, EQUIPMENT INSTALLERS, AND TOWER/ROOF TOP CONTRACTORS/SUBCONTRACTORS
29 CFR 1926.500 - SCOPE, APPLICATION, AND DEFINITIONS
29 CFR 1926.501 - DUTY TO HAVE FALL PROTECTION
29 CFR 1926.502 - FALL PROTECTION SYSTEMS CRITERIA AND PRACTICES

CALL TWO WORKING DAYS BEFORE YOU DIG!
811
NATIONAL UTILITIES UNDERGROUND LOCATE
SAFETY PRECAUTION SHALL BE IMPLEMENTED BY CONTRACTOR(S) AT ALL TRENCHES IN ACCORDANCE WITH CURRENT OSHA STANDARDS
ELECTRIC - RED SEWER - GREEN GAS/OIL - YELLOW SURVEY - PINK TELECOM - ORANGE PROPOSED - WHITE WATER - BLUE

## SYMBOLS AND ABBREVIATIONS

| | | | |
|---|---|---|---|
| A/C | AIR CONDITIONING | MAX | MAXIMUM |
| AGL | ABOVE GRADE LEVEL | MECH | MECHANICAL |
| APPROX | APPROXIMATELY | MTL | METAL |
| | | MFR | MANUFACTURE |
| BLDG | BUILDING | MGR | MANAGER |
| BLK | BLOCKING | MIN | MINIMUM |
| B.O. | BOTTOM OF | MISC | MISCELLANEOUS |
| B.O.S. | BOTTOM OF STEEL | | |
| | | N/A | NOT APPLICABLE |
| CLG | CEILING | N/C | NOT IN CONTRACT |
| CLR | CLEAR | N.S. | NEAR SIDE |
| CMU | CONCRETE MASONRY UNIT | NTS | NOT TO SCALE |
| CONC | CONCRETE | | |
| CONST | CONSTRUCTION | O.C | ON CENTER |
| CONT | CONTINUOUS | O.D. | OUTSIDE DIAMETER |
| | | O/H | OVERHEAD |
| DBL | DOUBLE | | |
| DIA/Ø | DIAMETER | PLCS | PLACES |
| DIAG | DIAGONAL | PLYWD | PLYWOOD |
| DN | DOWN | PROJ | PROJECT |
| DET | DETAIL | PROP | PROPERTY |
| DWG | DRAWING | PSF | POUNDS PER SQUARE FOOT |
| | | PSI | POUNDS PER SQUARE INCH |
| EA | EACH | PT | PRESSURE TREATED |
| EL | ELEVATION | | |
| ELEC | ELECTRICAL | RAD | RADIUS |
| EQ | EQUAL | REQ | REQUIRED |
| EQUIP | EQUIPMENT | RM | ROOM |
| E.W. | EACH WAY | RO | ROUGH OPENING |
| EXT | EXTERIOR | | |
| | | SCH | SCHEDULE |
| FIN | FINISH | SHT | SHEET |
| FLUOR | FLUORESCENT | SIM | SIMILAR |
| FLR | FLOOR | SPEC | SPECIFICATION |
| F.S. | FAR SIDE | SF | SQUARE FOOT |
| FT | FOOT | SS | STAINLESS STEEL |
| | | STL | STEEL |
| GA | GAUGE | STRUCT | STRUCTURAL |
| GALV | GALVANIZED | STD | STANDARD |
| G.C. | GENERAL CONTRACTOR | SQ FT | SQUARE FOOT |
| GRND | GROUND | SQ IN | SQUARE INCH |
| GYP BD | GYPSUM WALL BOARD | SUSP | SUSPENDED |
| HORZ | HORIZONTAL | THK | THICK |
| HR | HOUR | THRU | THROUGH |
| HT | HEIGHT | TNING | TINNED |
| HVAC | HEATING VENTILATION AIR CONDITIONING | T.O. | TOP OF |
| | | T.O.S. | TOP OF STEEL |
| | | TYP | TYPICAL |
| I.D. | INSIDE DIAMETER | | |
| IN | INCH | UNO | UNLESS NOTED OTHERWISE |
| INFO | INFORMATION | | |
| INSUL | INSULATION | VERT | VERTICAL |
| INT | INTERIOR | V.I.F | VERIFY IN FIELD |
| IBC | INTERNATIONAL BUILDING CODE | | |
| | | W/ | WITH |
| LBS | POUNDS | W/O | WITHOUT |
| | | WP | WATER PROOF |

| | | | |
|---|---|---|---|
| ℄ | PLATE | —o—o—o—o— | CHAIN-LINK FENCE |
| ℄ | CENTERLINE | —x—x—x—x— | CHAIN-LINK FENCE W/ BARB WIRE |
| | | —□—□—□—□— | WOOD FENCE |
| (E) | EXISTING | —— T —— T —— | TELEPHONE |
| #/X-## | DETAIL NUMBER | —— P —— P —— | POWER |
| | SHEET NUMBER | - - - - - - - - | GROUND WIRE |
| | | —— COAX —— | COAXIAL CABLE |

## SPECIAL INSPECTIONS:

SPECIAL INSPECTIONS IN ACCORDANCE WITH IBC 2012 SECTION 1704.

SOILS/GEOTECHNICAL:
- ☐SHORING INSTALLATION AND MONITORING
- ☐OBSERVE AND MONITOR EXCAVATION
- ☐VERIFY SOIL BEARING psf BEARING
- ☐SUBSURFACE DRAINAGE PLACEMENT
- ☐VERIFY FILL MATERIAL AND COMPACTION
- ☐VERIFY CONDITIONS AS ANTICIPATED
- ☐PILE PLACEMENT (AUGER CAST/DRIVEN PILE)
- ☐OTHER

REINFORCED CONCRETE:
- ☐REINFORCING STEEL AND CONCRETE PLACEMENT
- ☐PRESTRESSED/PRECAST CONCRETE FABRICATION AND ERECTION
- ☐BATCH PLANT INSPECTION
- ☐SHOTCRETE
- ☐GROUTING
- ☐OTHER

STRUCTURAL STEEL:
- ☒FABRICATION AND SHOP WELDS
- ☐ERECTION AND FIELD WELDS AND BOLTING
- ☐OTHER

STRUCTURAL ALUMINUM:
- ☐FABRICATION AND SHOP WELDS
- ☐ERECTION AND FIELD WELDS AND BOLTING
- ☐OTHER

STRUCTURAL MASONRY:
- ☐CONTINUOUS
- ☐PERIODIC
- ☐OTHER

OTHER: STRUCTURAL OBSERVATION FOR SEISMIC RESISTANCE
STRUCTURE HEIGHT > 75' PER IBC 1704.5

ANCHORING TO CONCRETE:
- ☐BOLTS INSTALLED IN CONCRETE
- ☐POST-INSTALLATION ADHESIVE ANCHORS
- ☒POST-INSTALLATION MECHANICAL ANCHORS

at&t
Your world. Delivered.

PLANS PREPARED BY:


CORNERSTONE ENGINEERING, INC
18928 WOODINVILLE-REDMOND RD NE, SUITE 210
WOODINVILLE, WA 98072
PHONE: 425.487.1732
EMAIL: cei@cornerstone-engr.com
WWW.CORNERSTONE-ENGR.COM


PROJECT INFO:

YA01

SELAH

2.3 MILES SOUTHEAST CRUSHER CANYON
SELAH, WA 98942
YAKIMA COUNTY

ISSUED FOR:

CONSTRUCTION

| REV: | DATE: | ISSUED FOR: | BY: |
|---|---|---|---|
| 5 | 03-25-16 | REVIEW COMMENTS | AJB |
| 4 | 02-29-16 | PER COMMENTS | LJS |
| 3 | 02-01-16 | FINAL, PER CITY COMMENTS | LJS |
| 2 | 01-18-16 | FINAL, PER CLIENT REVISION | DRA |

| DRAWN BY: | CHK.: | APV.: |
|---|---|---|
| JRF | MWO | MWO |

CURRENT ISSUE DATE:

03-25-16

LICENSURE:

MARK WESLEY OLSON
STATE OF WASHINGTON
22204
REGISTERED PROFESSIONAL ENGINEER
3/25/16

JURISDICTIONAL APPROVAL:

PROPRIETARY INFORMATION:


DO NOT SCALE DRAWINGS. CONTRACTOR MUST VERIFY ALL DIMENSIONS AND ADVISE CONSULTANTS OF ANY ERRORS AND OMISSIONS. ALL PREVIOUS ISSUES OF THIS DRAWING ARE SUPERSEDED BY THE LATEST REVISION. THE INFORMATION CONTAINED IN THIS SET OF DOCUMENTS IS PROPRIETARY BY NATURE. ANY USE OR DISCLOSURE OTHER THAN WHICH IS RELATED TO NAMED CLIENT IS STRICTLY PROHIBITED.


DRAWING TITLE:

GENERAL NOTES

DRAWING NUMBER:

G-1 | 5

CEI JOB NUMBER: LTE 3C/4C 14-13046

## THIS IS NOT A SURVEY

ALL INFORMATION AND TRUE NORTH HAVE BEEN OBTAINED FROM EXISTING DRAWINGS AND ARE APPROXIMATE.

## LEGAL DESCRIPTION (PARCEL #: 3004)

BEG SE COR SEC, TH N 35°47' W 2647.79 FT TH S 89°15'35 W 573.75 FT, TH N 58°02'54 W 769.7 FT, TH N 31°57'06 E 165 FT TO TRUE POB, TH N 31°57'06 E 75 FT >TH N 31°57'06 E 75 FT, TH N 58°02'54 W 50FT, TH S 31°57'06 W 75 FT, TH S 58°02'54 E50 FT TO TRUE POB

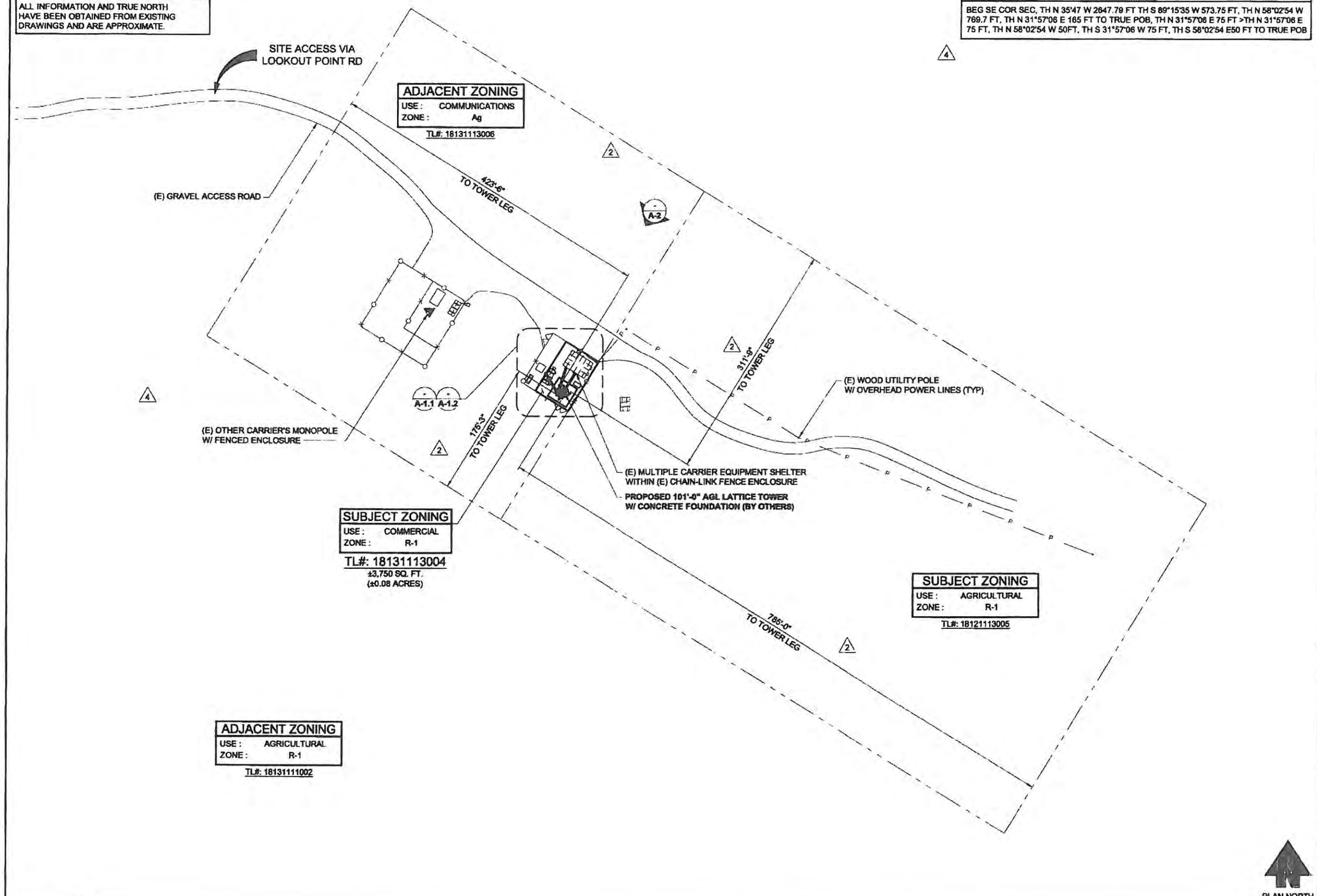


## SITE PLAN

22x34 SCALE: 1" = 60'-0" | 11x17 SCALE: 1" = 120'-0"

1

at&t Your world. Delivered.

PLANS PREPARED BY:


CORNERSTONE ENGINEERING, INC
16928 WOODINVILLE-REDMOND RD NE, SUITE 210
WOODINVILLE, WA 98072
PHONE: 425.487.1732
EMAIL: cei@cornerstone-engr.com
WWW.CORNERSTONE-ENGR.COM


PROJECT INFO:

YA01

SELAH

2.3 MILES SOUTHEAST CRUSHER CANYON
SELAH, WA 98942
YAKIMA COUNTY

ISSUED FOR:

CONSTRUCTION

| REV: | DATE: | ISSUED FOR: | BY: |
|---|---|---|---|
| 5 | 03-25-16 | REVIEW COMMENTS | AJB |
| 4 | 02-29-16 | PER COMMENTS | LJS |
| 3 | 02-01-16 | FINAL, PER CITY COMMENTS | LJS |
| 2 | 01-18-16 | FINAL, PER CLIENT REVISION | DRA |

| DRAWN BY: | CHK.: | APV.: |
|---|---|---|
| JRF | MWO | MWO |

CURRENT ISSUE DATE:

03-25-16

LICENSURE:

MARK WESLEY OLSON, STATE OF WASHINGTON, 32284, REGISTERED PROFESSIONAL ENGINEER
3/25/16

JURISDICTIONAL APPROVAL:

PROPRIETARY INFORMATION:


DO NOT SCALE DRAWINGS. CONTRACTOR MUST VERIFY ALL DIMENSIONS AND ADVISE CONSULTANTS OF ANY ERRORS AND OMISSIONS. ALL PREVIOUS ISSUES OF THIS DRAWING ARE SUPERSEDED BY THE LATEST REVISION. THE INFORMATION CONTAINED IN THIS SET OF DOCUMENTS IS PROPRIETARY BY NATURE. ANY USE OR DISCLOSURE OTHER THAN WHICH IS RELATED TO NAMED CLIENT IS STRICTLY PROHIBITED.


DRAWING TITLE:

SITE PLAN

DRAWING NUMBER:

A-1 | 5

CEI JOB NUMBER: LTE 3C/4C 14-13046

**NOTE:**

1. AT&T SHALL BE RESPONSIBLE, AT ITS OWN EXPENSE, FOR DISMANTLING THE OLD TOWER IN A CONDITION THAT LEAVES IT REUSABLE.
2. TOWER SHALL BE INSTALLED FOLLOWING R56 GROUNDING STANDARDS OR BETTER.
3. SEE RF-1 FOR ANTENNA PLAN

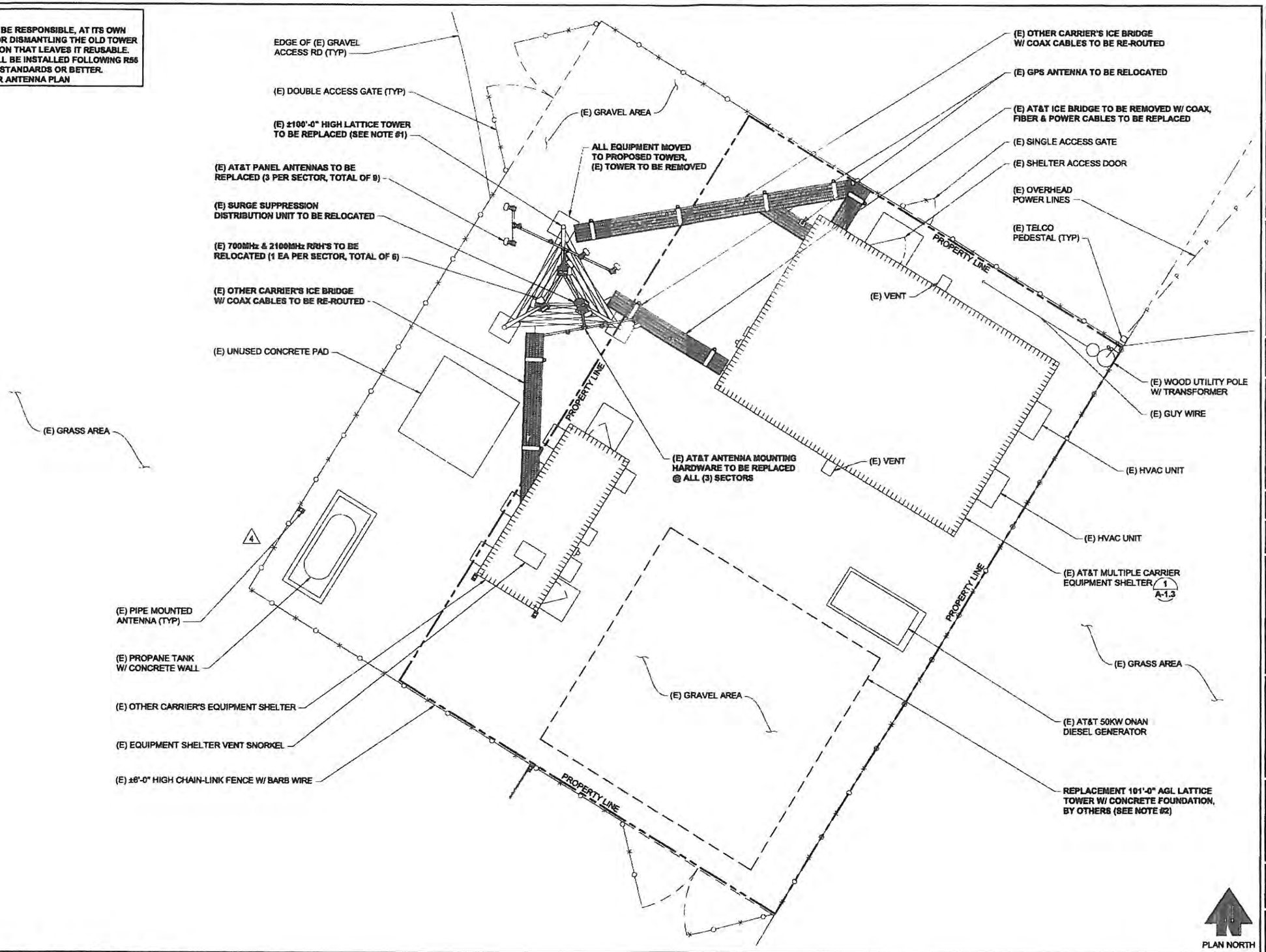


# EXISTING ENLARGED SITE PLAN

22x34 SCALE: 3/16" = 1'-0" | 11x17 SCALE: 3/32" = 1'-0"

1

at&t Your world. Delivered.

PLANS PREPARED BY:


CORNERSTONE ENGINEERING, INC
16928 WOODINVILLE-REDMOND RD NE, SUITE 210
WOODINVILLE, WA 98072
PHONE: 425.487.1732
EMAIL: cei@cornerstone-engr.com
WWW.CORNERSTONE-ENGR.COM


PROJECT INFO:

YA01

SELAH

2.3 MILES SOUTHEAST CRUSHER CANYON
SELAH, WA 98942
YAKIMA COUNTY

ISSUED FOR:

CONSTRUCTION

| REV: | DATE: | ISSUED FOR: | BY: |
|---|---|---|---|
| 5 | 03-25-16 | REVIEW COMMENTS | AJB |
| 4 | 02-29-16 | PER COMMENTS | LJS |
| 3 | 02-01-16 | FINAL, PER CITY COMMENTS | LJS |
| 2 | 01-18-16 | FINAL, PER CLIENT REVISION | DRA |

| DRAWN BY: | CHK.: | APV.: |
|---|---|---|
| JRF | MWO | MWO |

CURRENT ISSUE DATE:

03-25-16

LICENSURE:

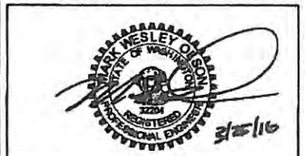


JURISDICTIONAL APPROVAL:

PROPRIETARY INFORMATION:


DO NOT SCALE DRAWINGS. CONTRACTOR MUST VERIFY ALL DIMENSIONS AND ADVISE CONSULTANTS OF ANY ERRORS AND OMISSIONS. ALL PREVIOUS ISSUES OF THIS DRAWING ARE SUPERSEDED BY THE LATEST REVISION. THE INFORMATION CONTAINED IN THIS SET OF DOCUMENTS IS PROPRIETARY BY NATURE. ANY USE OR DISCLOSURE OTHER THAN WHICH IS RELATED TO NAMED CLIENT IS STRICTLY PROHIBITED.


DRAWING TITLE:

EXISTING ENLARGED SITE PLAN

DRAWING NUMBER:

A-1.1 | 5

CEI JOB NUMBER: LTE 3C/4C 14-13046

**NOTE:**
1. AT&T SHALL BE RESPONSIBLE, AT ITS OWN EXPENSE, FOR DISMANTLING THE OLD TOWER IN A CONDITION THAT LEAVES IT REUSABLE.
2. TOWER SHALL BE INSTALLED FOLLOWING R56 GROUNDING STANDARDS OR BETTER.
3. SEE RF-1 FOR ANTENNA PLAN

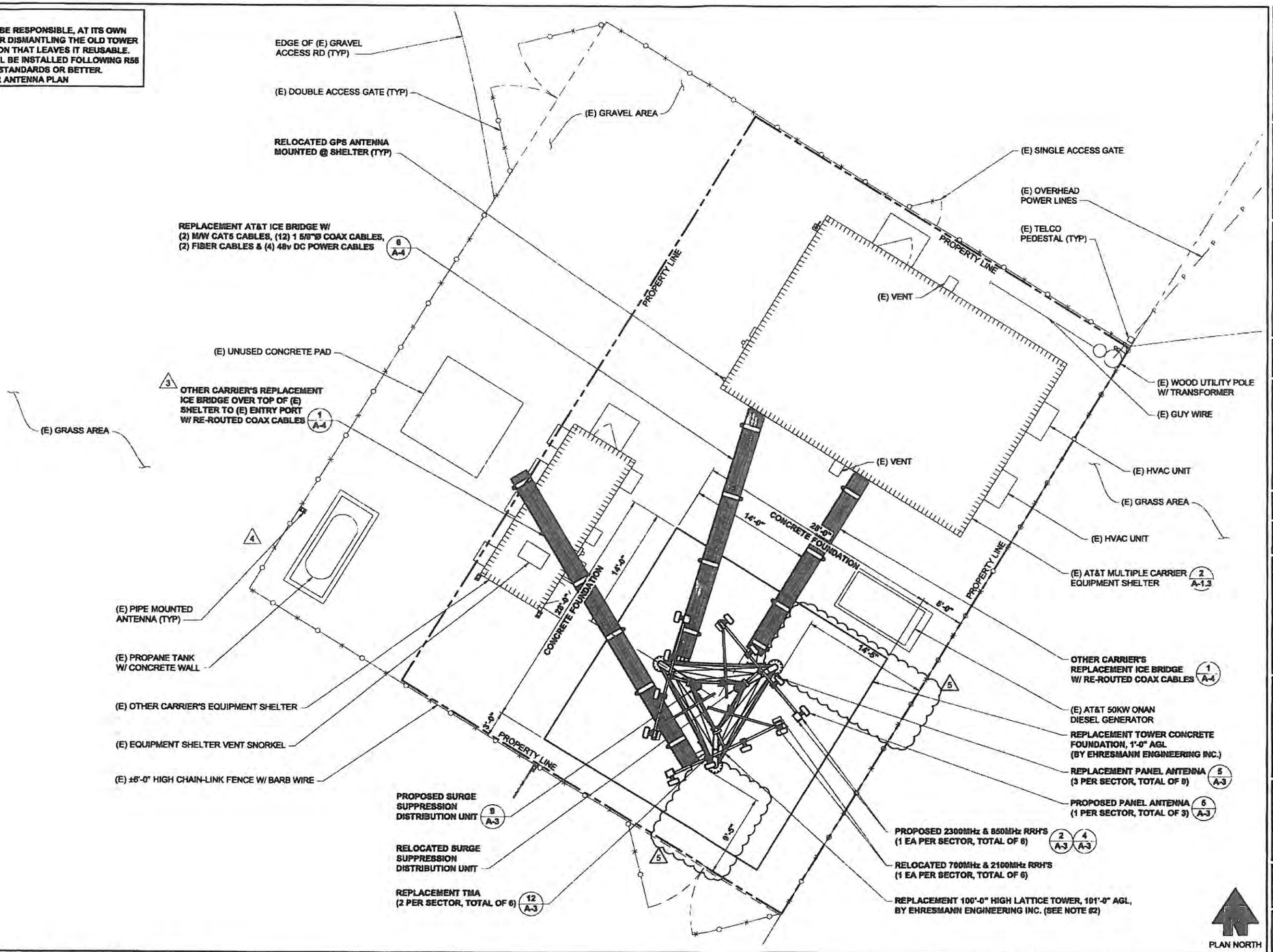


# PROPOSED ENLARGED SITE PLAN

22x34 SCALE: 3/16" = 1'-0" | 11x17 SCALE: 3/32" = 1'-0"

1

at&t
Your world. Delivered.

PLANS PREPARED BY:


CORNERSTONE ENGINEERING, INC
18928 WOODINVILLE-REDMOND RD NE, SUITE 210
WOODINVILLE, WA 98072
PHONE: 425.487.1732
EMAIL: cei@cornerstone-engr.com
WWW.CORNERSTONE-ENGR.COM


PROJECT INFO:

YA01

SELAH

2.3 MILES SOUTHEAST CRUSHER CANYON
SELAH, WA 98942
YAKIMA COUNTY

ISSUED FOR:

CONSTRUCTION

| REV: | DATE: | ISSUED FOR: | BY: |
|---|---|---|---|
| 5 | 03-25-16 | REVIEW COMMENTS | AJB |
| 4 | 02-29-16 | PER COMMENTS | LJS |
| 3 | 02-01-16 | FINAL, PER CITY COMMENTS | LJS |
| 2 | 01-18-16 | FINAL, PER CLIENT REVISION | DRA |

| DRAWN BY: | CHK.: | APV.: |
|---|---|---|
| JRF | MWO | MWO |

CURRENT ISSUE DATE:

03-25-16

LICENSURE:

MARK WESLEY OLSON
STATE OF WASHINGTON
32204
REGISTERED PROFESSIONAL ENGINEER
3/25/16

JURISDICTIONAL APPROVAL:

PROPRIETARY INFORMATION:


DO NOT SCALE DRAWINGS. CONTRACTOR MUST VERIFY ALL DIMENSIONS AND ADVISE CONSULTANTS OF ANY ERRORS AND OMISSIONS. ALL PREVIOUS ISSUES OF THIS DRAWING ARE SUPERSEDED BY THE LATEST REVISION. THE INFORMATION CONTAINED IN THIS SET OF DOCUMENTS IS PROPRIETARY BY NATURE. ANY USE OR DISCLOSURE OTHER THAN WHICH IS RELATED TO NAMED CLIENT IS STRICTLY PROHIBITED.


DRAWING TITLE:

PROPOSED ENLARGED SITE PLAN

DRAWING NUMBER:

A-1.2 | 5

CEI JOB NUMBER: LTE 3C/4C 14-13045

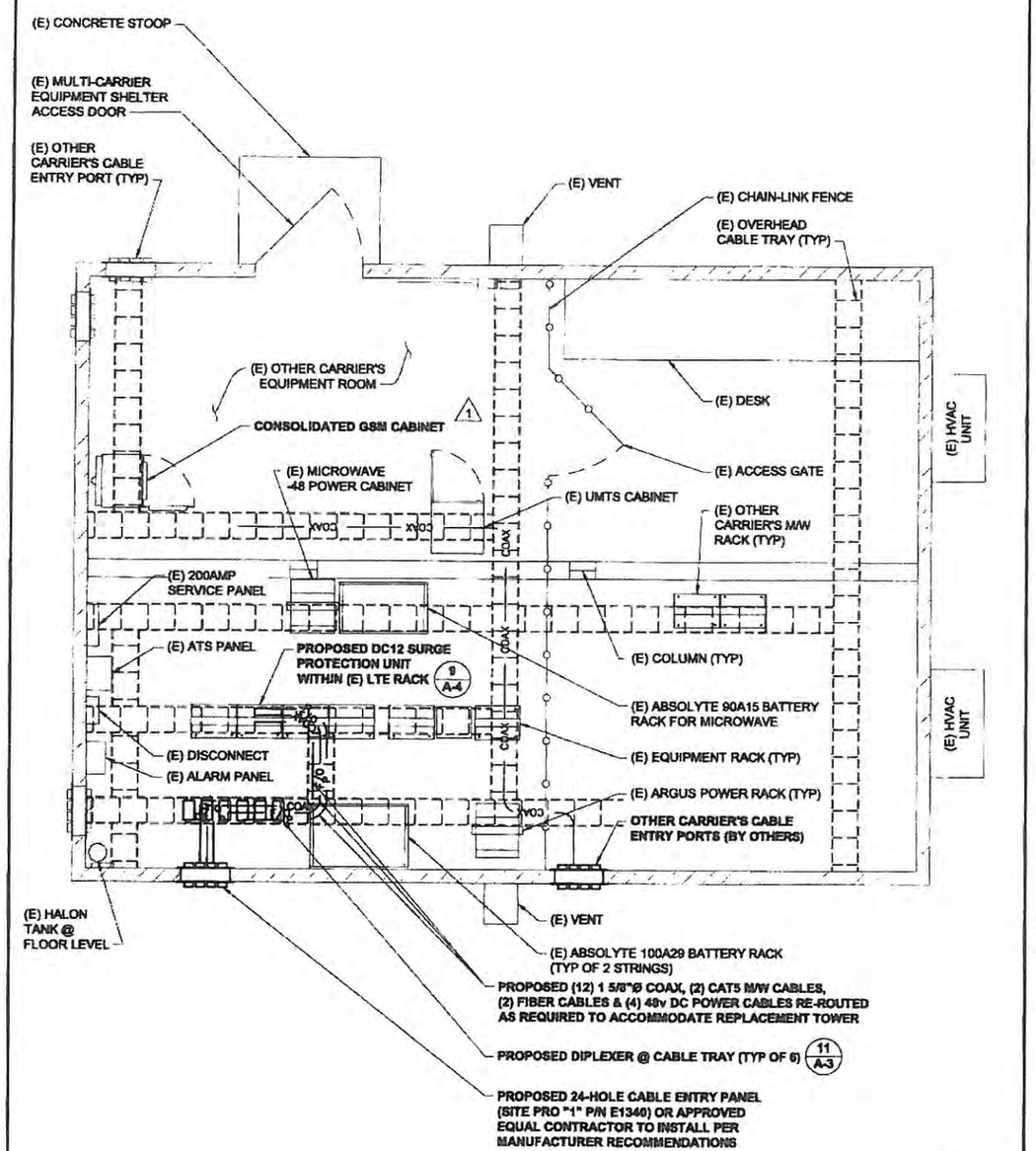


## PROPOSED SHELTER PLAN

22x34 SCALE: 3/8" = 1'-0" | 11x17 SCALE: 3/16" = 1'-0"

2

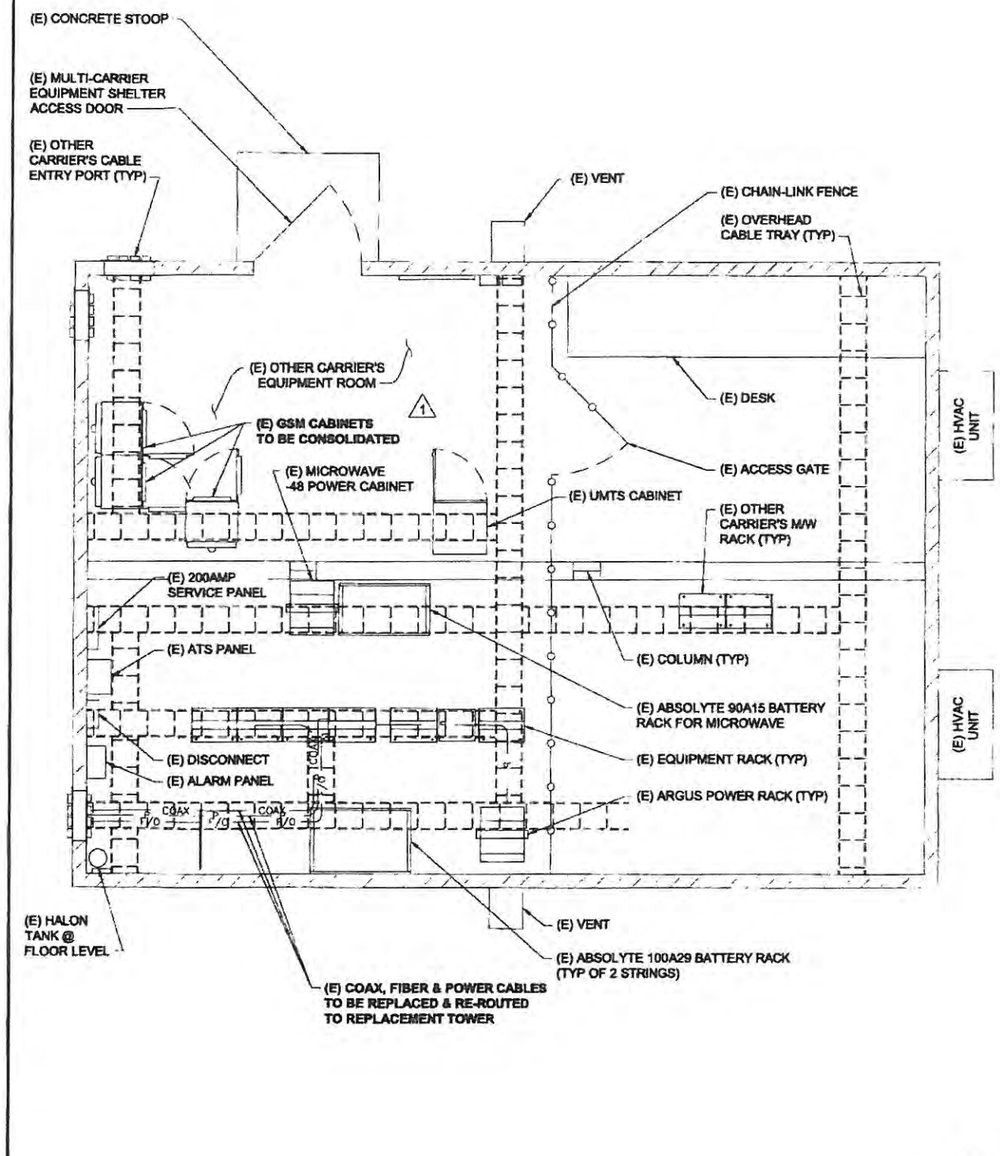


## EXISTING SHELTER PLAN

22x34 SCALE: 3/8" = 1'-0" | 11x17 SCALE: 3/16" = 1'-0"

1

at&t
Your world. Delivered.

PLANS PREPARED BY:


CORNERSTONE ENGINEERING, INC
16828 WOODINVILLE-REDMOND RD NE, SUITE 210
WOODINVILLE, WA 98072
PHONE: 425.467.1732
EMAIL: cei@cornerstone-engr.com
WWW.CORNERSTONE-ENGR.COM


PROJECT INFO:

YA01

SELAH

2.3 MILES SOUTHEAST CRUSHER CANYON
SELAH, WA 98942
YAKIMA COUNTY

ISSUED FOR:

CONSTRUCTION

| REV: | DATE: | ISSUED FOR: | BY: |
|---|---|---|---|
| 5 | 03-25-16 | REVIEW COMMENTS | AJB |
| 4 | 02-29-16 | PER COMMENTS | LJS |
| 3 | 02-01-16 | FINAL, PER CITY COMMENTS | LJS |
| 2 | 01-18-16 | FINAL, PER CLIENT REVISION | DRA |

| DRAWN BY: | CHK.: | APV.: |
|---|---|---|
| JRF | MWO | MWO |

CURRENT ISSUE DATE:

03-25-16

LICENSURE:

MARK WESLEY OLSON, STATE OF WASHINGTON, 32224, REGISTERED PROFESSIONAL ENGINEER
3/25/16

JURISDICTIONAL APPROVAL:

PROPRIETARY INFORMATION:


DO NOT SCALE DRAWINGS. CONTRACTOR MUST VERIFY ALL DIMENSIONS AND ADVISE CONSULTANTS OF ANY ERRORS AND OMISSIONS. ALL PREVIOUS ISSUES OF THIS DRAWING ARE SUPERSEDED BY THE LATEST REVISION. THE INFORMATION CONTAINED IN THIS SET OF DOCUMENTS IS PROPRIETARY BY NATURE. ANY USE OR DISCLOSURE OTHER THAN WHICH IS RELATED TO NAMED CLIENT IS STRICTLY PROHIBITED.


DRAWING TITLE:

EXISTING & PROPOSED SHELTER PLANS

DRAWING NUMBER:

A-1.3 | 5

CEI JOB NUMBER: LTE 3C/4C 14-13046

**NOTES:**

1. PAINT PROPOSED ANTENNAS, MOUNTING HARDWARE AND COAX TO MATCH EXISTING CONDITIONS.
2. SEE RF-1 FOR EXISTING & PROPOSED ANTENNA PLANS.
3. TOWER TO BE PAINTED PER FAA REQUIREMENTS, ORANGE AND WHITE ALTERNATING STRIPES.

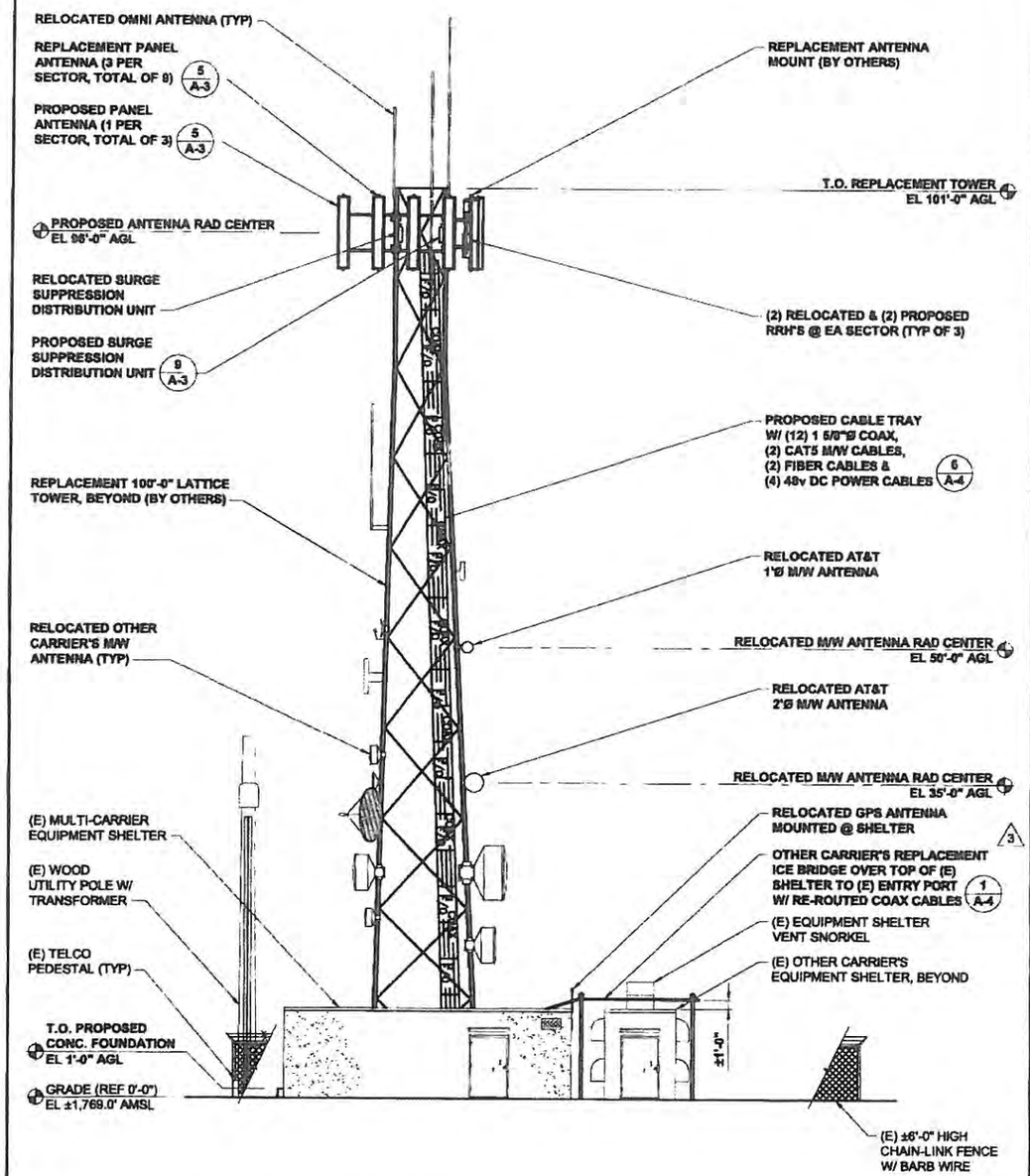


## PROPOSED NORTHEAST ELEVATION

22x34 SCALE: 1/8" = 1'-0" | 11x17 SCALE: 1/16" = 1'-0"

2

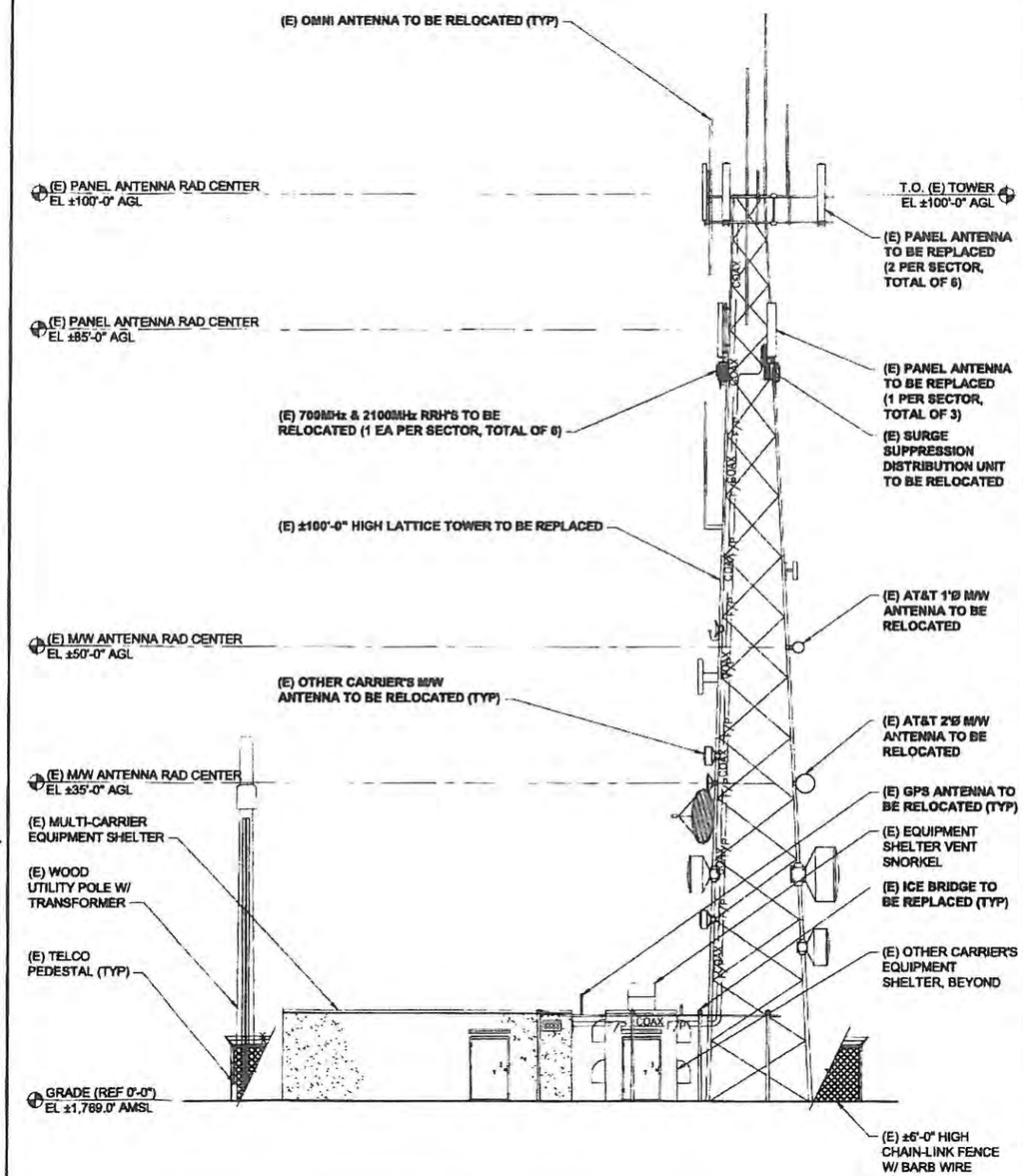


## EXISTING NORTHEAST ELEVATION

22x34 SCALE: 1/8" = 1'-0" | 11x17 SCALE: 1/16" = 1'-0"

1

at&t
Your world. Delivered.

PLANS PREPARED BY:


CORNERSTONE ENGINEERING, INC
18926 WOODINVILLE-REDMOND RD NE, SUITE 210
WOODINVILLE, WA 98072
PHONE: 425.487.1732
EMAIL: cei@cornerstone-engr.com
WWW.CORNERSTONE-ENGR.COM


PROJECT INFO:

YA01

SELAH

2.3 MILES SOUTHEAST CRUSHER CANYON
SELAH, WA 98942
YAKIMA COUNTY

ISSUED FOR:

CONSTRUCTION

| REV: | DATE: | ISSUED FOR: | BY: |
|---|---|---|---|
| 5 | 03-25-16 | REVIEW COMMENTS | AJB |
| 4 | 02-29-16 | PER COMMENTS | LJS |
| 3 | 02-01-16 | FINAL, PER CITY COMMENTS | LJS |
| 2 | 01-18-16 | FINAL, PER CLIENT REVISION | DRA |

| DRAWN BY: | CHK.: | APV.: |
|---|---|---|
| JRF | MWO | MWO |

CURRENT ISSUE DATE:

03-25-16

LICENSURE:

MARK WESLEY OLSON
STATE OF WASHINGTON
32204
REGISTERED PROFESSIONAL ENGINEER
3/25/16

JURISDICTIONAL APPROVAL:

PROPRIETARY INFORMATION:


DO NOT SCALE DRAWINGS. CONTRACTOR MUST VERIFY ALL DIMENSIONS AND ADVISE CONSULTANTS OF ANY ERRORS AND OMISSIONS. ALL PREVIOUS ISSUES OF THIS DRAWING ARE SUPERSEDED BY THE LATEST REVISION. THE INFORMATION CONTAINED IN THIS SET OF DOCUMENTS IS PROPRIETARY BY NATURE. ANY USE OR DISCLOSURE OTHER THAN WHICH IS RELATED TO NAMED CLIENT IS STRICTLY PROHIBITED.


DRAWING TITLE:

EXISTING & PROPOSED NORTHEAST ELEVATIONS

DRAWING NUMBER:

A-2 | 5

CEI JOB NUMBER: LTE 3C/4C 14-13048

## TOWER MOUNTED AMPLIFIER

| | |
|---|---|
| MANUFACTURER | COMMSCOPE |
| MODEL | E15Z01P13 |
| HEIGHT | 12.9" |
| WIDTH | 7.2" |
| DEPTH | 5.5" |

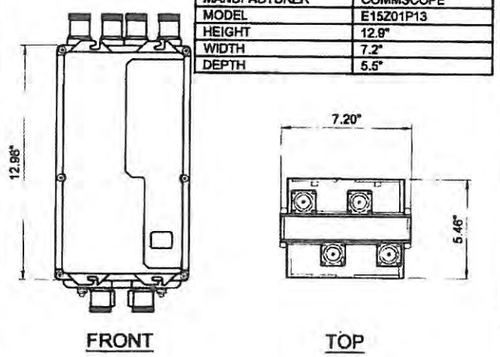


## TMA DETAIL

22x34 SCALE: 3" = 1'-0" | 11x17 SCALE: 1 1/2" = 1'-0" | 12

## DIPLEXER SPECS

| | |
|---|---|
| MANUFACTURER | COMMSCOPE |
| MODEL | CDX723A-DS |
| HEIGHT | 8.9" |
| WIDTH | 4.9" |
| DEPTH | 2.4" |
| WEIGHT | 6.2 lbs |

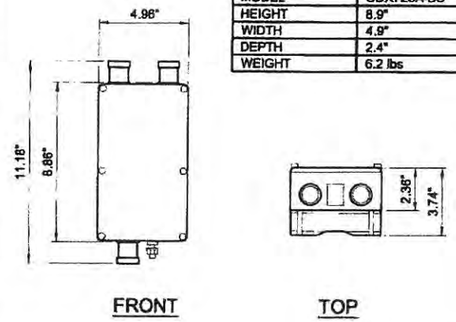


## DIPLEXER DETAIL

22x34 SCALE: 3" = 1'-0" | 11x17 SCALE: 1 1/2" = 1'-0" | 11

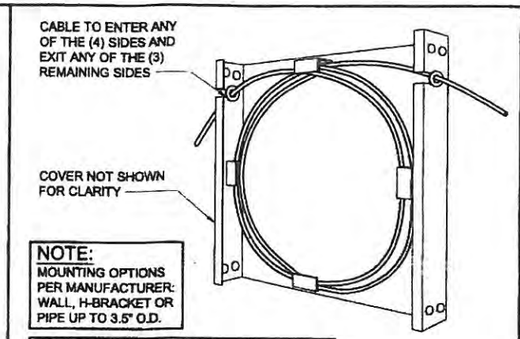


NOTE:
MOUNTING OPTIONS PER MANUFACTURER: WALL, H-BRACKET OR PIPE UP TO 3.5" O.D.

## EXCESS FIBER BOX

| | |
|---|---|
| MANUFACTURER | RAYCAP |
| MODEL | FB-15-ABOX CEQ 10505 |
| DIMENSIONS | 18"x18"x4" |
| CAPACITY | 30m (±115') OF 10mm |

## FIBER SLACK BOX

22x34 SCALE: NTS | 11x17 SCALE: NTS | 10

## SURGE SUPPRESSION DISTRIBUTION UNIT

| | |
|---|---|
| MANUFACTURER | RAYCAP |
| MODEL | DC6-48-60-18-8F "SQUID" |

NOTE:
TO BE INSTALLED WITHIN 6 FEET OF RADIO UNIT

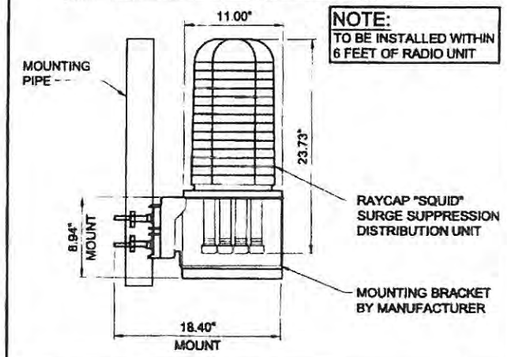


## SURGE SUPPRESSOR

22x34 SCALE: 1 1/2" = 1'-0" | 11x17 SCALE: 3/4" = 1'-0" | 9

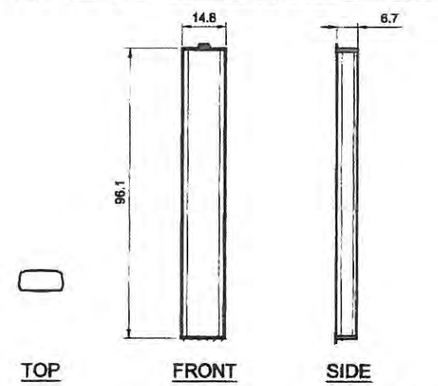


ANTENNA:
KATHREIN 800 10866

## ANTENNA DETAIL

22x34 SCALE: 1/2" = 1'-0" | 11x17 SCALE: 1/4" = 1'-0" | 5

## NOT USED

22x34 SCALE: NTS | 11x17 SCALE: NTS | 8

## NOT USED

22x34 SCALE: NTS | 11x17 SCALE: NTS | 7

## NOT USED

22x34 SCALE: NTS | 11x17 SCALE: NTS | 6

## 850MHz RRH

| | |
|---|---|
| MANUFACTURER | ALCATEL-LUCENT |
| MODEL | RRH4x25-WCS |
| HEIGHT | 22.4" |
| WIDTH | 8.3" |
| DEPTH | 9.8" |
| WEIGHT | 53 LBS |

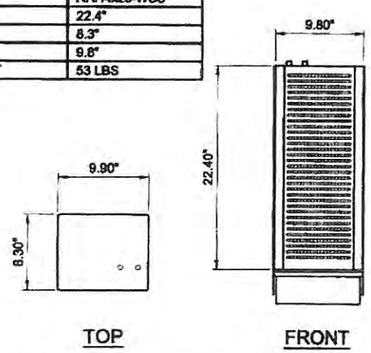


## 850MHz RRH

22x34 SCALE: 1 1/2" = 1'-0" | 11x17 SCALE: 3/4" = 1'-0" | 4

## NOT USED

22x34 SCALE: NTS | 11x17 SCALE: NTS | 3

## 2300MHz RRH

| | |
|---|---|
| MANUFACTURER | ALCATEL-LUCENT |
| MODEL | RRH4x25-WCS |
| HEIGHT | 31.5" |
| WIDTH | 12.0" |
| DEPTH | 8.7" |
| WEIGHT | 70 LBS |

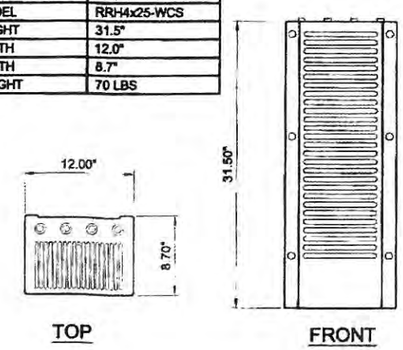


## 2300MHz RRH (WCS)

22x34 SCALE: 1 1/2" = 1'-0" | 11x17 SCALE: 3/4" = 1'-0" | 2

## NOT USED

22x34 SCALE: NTS | 11x17 SCALE: NTS | 1

at&t
Your world. Delivered.

PLANS PREPARED BY:


CORNERSTONE ENGINEERING, INC
16928 WOODINVILLE-REDMOND RD NE, SUITE 210
WOODINVILLE, WA 98072
PHONE: 425.487.1732
EMAIL: cei@cornerstone-engr.com
WWW.CORNERSTONE-ENGR.COM


PROJECT INFO:

YA01

SELAH

2.3 MILES SOUTHEAST CRUSHER CANYON
SELAH, WA 98942
YAKIMA COUNTY

ISSUED FOR:

CONSTRUCTION

| REV: | DATE: | ISSUED FOR: | BY: |
|---|---|---|---|
| 5 | 03-25-16 | REVIEW COMMENTS | AJB |
| 4 | 02-29-16 | PER COMMENTS | LJS |
| 3 | 02-01-16 | FINAL, PER CITY COMMENTS | LJS |
| 2 | 01-18-16 | FINAL, PER CLIENT REVISION | DRA |

| DRAWN BY: | CHK.: | APV.: |
|---|---|---|
| JRF | MWO | MWO |

CURRENT ISSUE DATE:

03-25-16

LICENSURE:

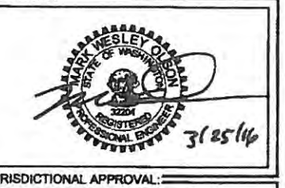


JURISDICTIONAL APPROVAL:

PROPRIETARY INFORMATION:


DO NOT SCALE DRAWINGS. CONTRACTOR MUST VERIFY ALL DIMENSIONS AND ADVISE CONSULTANTS OF ANY ERRORS AND OMISSIONS. ALL PREVIOUS ISSUES OF THIS DRAWING ARE SUPERSEDED BY THE LATEST REVISION. THE INFORMATION CONTAINED IN THIS SET OF DOCUMENTS IS PROPRIETARY BY NATURE. ANY USE OR DISCLOSURE OTHER THAN WHICH IS RELATED TO NAMED CLIENT IS STRICTLY PROHIBITED.


DRAWING TITLE:

DETAIL SHEET

DRAWING NUMBER:

A-3 | 5

CEI JOB NUMBER: LTE 3C/4C 14-13046

## NOT USED
22x34 SCALE: NTS | 11x17 SCALE: NTS
12

## NOT USED
22x34 SCALE: NTS | 11x17 SCALE: NTS
11

## GPS ANTENNA
22x34 SCALE: NTS | 11x17 SCALE: NTS
10

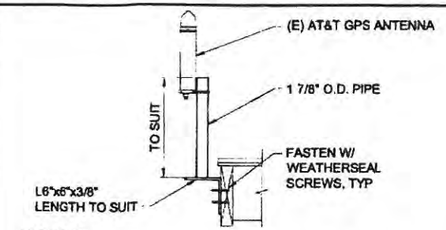


NOTES:

1. LOCATION OF ANTENNA MUST HAVE CLEAR VIEW OF SOUTHERN SKY AND CANNOT HAVE ANY BLOCKAGES EXCEEDING 25% OF THE SURFACE AREA OF A HEMISPHERE AROUND THE GPS ANTENNA.
2. ALL GPS ANTENNA LOCATIONS MUST BE ABLE TO RECEIVE CLEAR SIGNALS FROM A MINIMUM OF FOUR (4) SATELLITES. VERIFY WITH HANDHELD GPS BEFORE FINAL LOCATION OF GPS ANTENNA.
3. PROPOSED GPS MOUNTED A MINIMUM OF 10' FROM ANY TRANSMITTING ANTENNAS.
4. CEQ.11891 LUCENT, 408762045, KS24535L10, 1:2 GPS SPLITTER, ASSEMBLY TO BE USED FOR LTE GPS WHEN (2) NODE-BS ARE USED.

## RRH BRACKET
22x34 SCALE: NTS | 11x17 SCALE: NTS
9

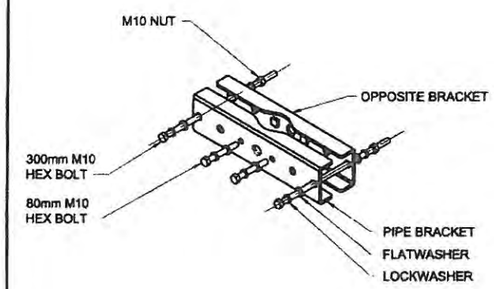


## NOT USED
22x34 SCALE: NTS | 11x17 SCALE: NTS
8

## NOT USED
22x34 SCALE: NTS | 11x17 SCALE: NTS
7

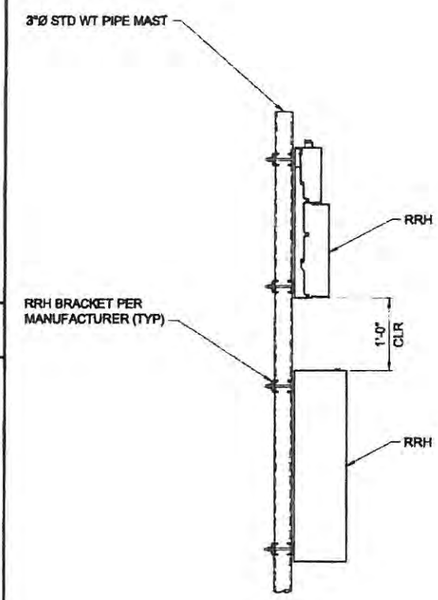


KATHREIN STANDARD MOUNTING KIT

| NO. | PART NAME | QTY |
|---|---|---|
| 1 | FIXED CLAMP | 4 |
| 2 | HEX. CAP BOLT, M8 | 4 |
| 3 | SPLIT WASHER, M8 | 8 |
| 4 | HEX. NUT, M8 | 8 |

NOTE:
ALL CONNECTION COMPONENTS ARE STAINLESS STEEL 304 ASTM A276-304 MATERIAL

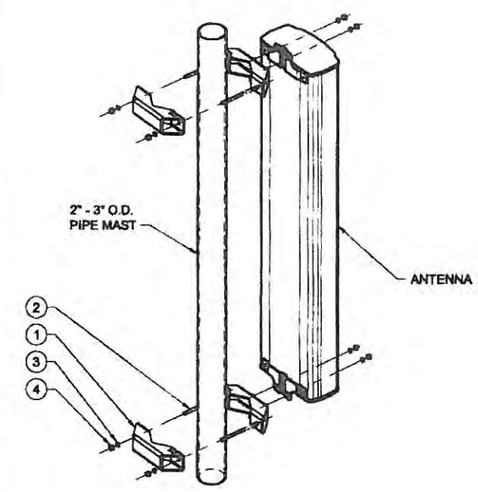


## NOT USED
22x34 SCALE: NTS | 11x17 SCALE: NTS
4

## NOT USED
22x34 SCALE: NTS | 11x17 SCALE: NTS
3

## EQUIPMENT ATTACHMENT
22x34 SCALE: 1" = 1'-0" | 11x17 SCALE: 1/2" = 1'-0"
2

## ANTENNA BRACKET
22x34 SCALE: NTS | 11x17 SCALE: NTS
1

at&t
Your world. Delivered.

PLANS PREPARED BY:


CORNERSTONE ENGINEERING, INC
16928 WOODINVILLE-REDMOND RD NE, SUITE 210
WOODINVILLE, WA 98072
PHONE: 425.487.1732
EMAIL: cei@cornerstone-engr.com
WWW.CORNERSTONE-ENGR.COM


PROJECT INFO:

YA01

SELAH

2.3 MILES SOUTHEAST CRUSHER CANYON
SELAH, WA 98942
YAKIMA COUNTY

ISSUED FOR:

CONSTRUCTION

| REV: | DATE: | ISSUED FOR: | BY: |
|---|---|---|---|
| 5 | 03-25-16 | REVIEW COMMENTS | AJB |
| 4 | 02-29-16 | PER COMMENTS | LJS |
| 3 | 02-01-16 | FINAL, PER CITY COMMENTS | LJS |
| 2 | 01-18-16 | FINAL, PER CLIENT REVISION | DRA |

| DRAWN BY: | CHK.: | APV.: |
|---|---|---|
| JRF | MWO | MWO |

CURRENT ISSUE DATE:
03-25-16

LICENSURE:

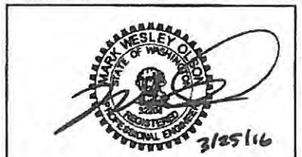


JURISDICTIONAL APPROVAL:

PROPRIETARY INFORMATION:


DO NOT SCALE DRAWINGS. CONTRACTOR MUST VERIFY ALL DIMENSIONS AND ADVISE CONSULTANTS OF ANY ERRORS AND OMISSIONS. ALL PREVIOUS ISSUES OF THIS DRAWING ARE SUPERSEDED BY THE LATEST REVISION. THE INFORMATION CONTAINED IN THIS SET OF DOCUMENTS IS PROPRIETARY BY NATURE. ANY USE OR DISCLOSURE OTHER THAN WHICH IS RELATED TO NAMED CLIENT IS STRICTLY PROHIBITED.


DRAWING TITLE:

DETAIL SHEET

DRAWING NUMBER:

A-3.1 | 5

CEI JOB NUMBER: LTE 3C/4C 14-13046

## PROPOSED ANTENNA CONFIGURATION AND SCHEDULE - PER RFDS REV 3.0 - DATED 03-27-15

| SECTOR X | AZIMUTH | RAD CENTER | QTY | VENDOR | MODEL | ELEC. TILT | MECH. TILT | RET | TMA | RRH QTY | # OF FEEDERS | FEEDER TYPE | FEEDER LENGTH | PLACEMENT | DIPLEXED |
|---|---|---|---|---|---|---|---|---|---|---|---|---|---|---|---|
| LTE AWS | 150° | 96'-0" | 1 | KATHREIN | 80010806 | 5° | 0° | YES | - | 2 (E) | (N) | FIBER | ±150' | CABLE LADDER | NO |
| LTE 700 | | | | | | 5° | | | - | | | | | | |
| LTE AWS | | | | | | 5° | | | - | | | | | | |
| GSM 1900 | 150° | 96'-0" | 1 | KATHREIN | 80010806 | 6° | 0° | YES | - | - | 2 (N) | 1 5/8"⊡ | ±140' | CABLE LADDER | YES |
| GSM 850 | | | | | | 6° | | | E15Z01P13 | | | | | | |
| UMTS 1900 | 150° | 96'-0" | 1 | KATHREIN | 80010806 | 6° | 1° | YES | - | - | 2 (N) | 1 5/8"⊡ | ±140' | CABLE LADDER | YES |
| UMTS 850 | | | | | | 10° | | | E15Z01P13 | | | | | | |
| LTE WCS | 150° | 96'-0" | 1 | KATHREIN | 80010806 | 5° | 2° | YES | - | 2 (N) | (N) | FIBER | ±150' | CABLE LADDER | NO |
| LTE 850 | | | | | | 5° | | | - | | | | | | |
| LTE WCS | | | | | | 5° | | | - | | | | | | |

| SECTOR Y | AZIMUTH | RAD CENTER | QTY | VENDOR | MODEL | ELEC. TILT | MECH. TILT | RET | TMA | RRH QTY | # OF FEEDERS | FEEDER TYPE | FEEDER LENGTH | PLACEMENT | DIPLEXED |
|---|---|---|---|---|---|---|---|---|---|---|---|---|---|---|---|
| LTE AWS | 285° | 96'-0" | 1 | KATHREIN | 80010806 | 2° | 0° | YES | - | 2 (E) | (N) | FIBER | ±150' | CABLE LADDER | NO |
| LTE 700 | | | | | | 6° | | | - | | | | | | |
| LTE AWS | | | | | | 2° | | | - | | | | | | |
| GSM 1900 | 285° | 96'-0" | 1 | KATHREIN | 80010806 | 6° | 0° | YES | - | - | 2 (N) | 1 5/8"⊡ | ±140' | CABLE LADDER | YES |
| GSM 850 | | | | | | 10° | | | E15Z01P13 | | | | | | |
| UMTS 1900 | 285° | 96'-0" | 1 | KATHREIN | 80010806 | 4° | 0° | YES | - | - | 2 (N) | 1 5/8"⊡ | ±140' | CABLE LADDER | YES |
| UMTS 850 | | | | | | 10° | | | E15Z01P13 | | | | | | |
| LTE WCS | 285° | 96'-0" | 1 | KATHREIN | 80010806 | 2° | 0° | YES | - | 2 (N) | (N) | FIBER | ±150' | CABLE LADDER | NO |
| LTE 850 | | | | | | 6° | | | - | | | | | | |
| LTE WCS | | | | | | 2° | | | - | | | | | | |

| SECTOR Z | AZIMUTH | RAD CENTER | QTY | VENDOR | MODEL | ELEC. TILT | MECH. TILT | RET | TMA | RRH QTY | # OF FEEDERS | FEEDER TYPE | FEEDER LENGTH | PLACEMENT | DIPLEXED |
|---|---|---|---|---|---|---|---|---|---|---|---|---|---|---|---|
| LTE AWS | 50° | 96'-0" | 1 | KATHREIN | 80010806 | 5° | 0° | YES | - | 2 (E) | (N) | FIBER | ±150' | CABLE LADDER | NO |
| LTE 700 | | | | | | 5° | | | - | | | | | | |
| LTE AWS | | | | | | 5° | | | - | | | | | | |
| GSM 1900 | 50° | 96'-0" | 1 | KATHREIN | 80010806 | 6° | 0° | YES | - | - | 2 (N) | 1 5/8"⊡ | ±140' | CABLE LADDER | YES |
| GSM 850 | | | | | | 6° | | | E15Z01P13 | | | | | | |
| UMTS 1900 | 50° | 96'-0" | 1 | KATHREIN | 80010806 | 4° | 2° | YES | - | - | 2 (N) | 1 5/8"⊡ | ±140' | CABLE LADDER | YES |
| UMTS 850 | | | | | | 10° | | | E15Z01P13 | | | | | | |
| LTE WCS | 50° | 96'-0" | 1 | KATHREIN | 80010806 | 6° | 0° | YES | - | 2 (N) | (N) | FIBER | ±150' | CABLE LADDER | NO |
| LTE 850 | | | | | | 6° | | | - | | | | | | |
| LTE WCS | | | | | | 6° | | | - | | | | | | |

## PROPOSED RF SCHEDULE △1

22x34 SCALE: NTS | 11x17 SCALE: NTS

4

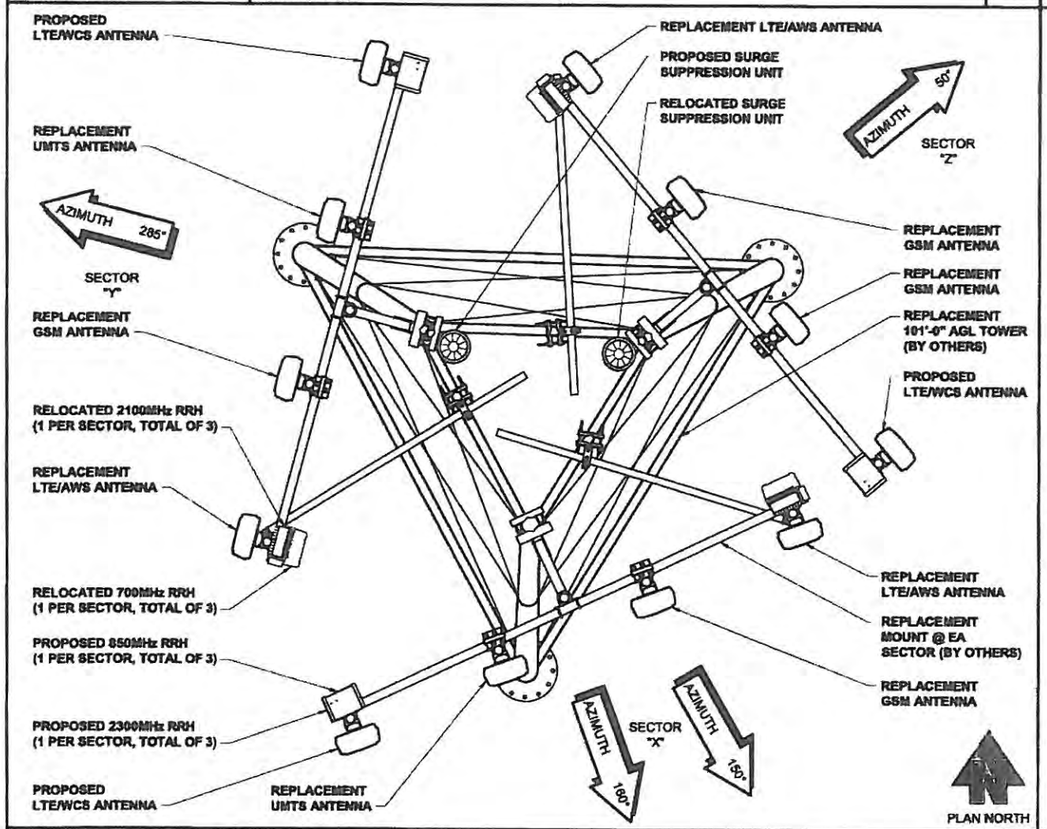


## PROPOSED ANTENNA PLAN

22x34 SCALE: 1/2" = 1'-0" | 11x17 SCALE: 1/4" = 1'-0"

2

## EXISTING ANTENNA CONFIGURATION AND SCHEDULE - PER RFDS REV 3.0 - DATED 03-27-15

| SECTOR X | AZIMUTH | RAD CENTER | QTY | VENDOR | MODEL | ELEC. TILT | MECH. TILT | RET | TMA | RRH QTY | # OF FEEDERS | FEEDER TYPE | FEEDER LENGTH | PLACEMENT | DIPLEXED |
|---|---|---|---|---|---|---|---|---|---|---|---|---|---|---|---|
| GSM 1900 | 160° | ±100'-0" | 1 | KATHREIN | 742-265 | 6° | 0° | YES | - | - | 4 (E) | 1 5/8"⊡ | ±125' | (E) CABLE LADDER | NO |
| GSM 850 | | | | | | 8° | | | TT19-065P111-001 | | | | | | |
| LTE 700/AWS | 150° | ±85'-0" | 1 | KMW | AM-X-CD-16-65-00T | 2° | 0° | YES | - | 2 (E) | (E) | FIBER | ±100' | (E) CABLE LADDER | NO |
| LTE 700/AWS | | | | | | 2° | | | - | | | | | | |
| UMTS 1900 | 160° | 100'-0" | 1 | KATHREIN | 742-265 | 8° | 1° | YES | - | - | 2 (E) | 1 5/8"⊡ | ±125' | (E) CABLE LADDER | YES |
| UMTS 850 | | | | | | 10° | | | TT19-065P111-001 | | | | | | |

| SECTOR Y | AZIMUTH | RAD CENTER | QTY | VENDOR | MODEL | ELEC. TILT | MECH. TILT | RET | TMA | RRH QTY | # OF FEEDERS | FEEDER TYPE | FEEDER LENGTH | PLACEMENT | DIPLEXED |
|---|---|---|---|---|---|---|---|---|---|---|---|---|---|---|---|
| GSM 1900 | 285° | ±100'-0" | 1 | KATHREIN | 742-265 | 6° | 0° | YES | - | - | 4 (E) | 1 5/8"⊡ | ±125' | (E) CABLE LADDER | NO |
| GSM 850 | | | | | | 10° | | | TT19-065P111-001 | | | | | | |
| LTE 700/AWS | 285° | ±85'-0" | 1 | KMW | AM-X-CD-16-65-00T | 2° | 0° | YES | - | 2 (E) | (E) | FIBER | ±100' | (E) CABLE LADDER | NO |
| LTE 700/AWS | | | | | | 2° | | | - | | | | | | |
| UMTS 1900 | 285° | 100'-0" | 1 | KATHREIN | 742-265 | 4° | 0° | YES | - | - | 2 (E) | 1 5/8"⊡ | ±125' | (E) CABLE LADDER | YES |
| UMTS 850 | | | | | | 10° | | | TT19-065P111-001 | | | | | | |

| SECTOR Z | AZIMUTH | RAD CENTER | QTY | VENDOR | MODEL | ELEC. TILT | MECH. TILT | RET | TMA | RRH QTY | # OF FEEDERS | FEEDER TYPE | FEEDER LENGTH | PLACEMENT | DIPLEXED |
|---|---|---|---|---|---|---|---|---|---|---|---|---|---|---|---|
| GSM 1900 | 50° | ±100'-0" | 1 | KATHREIN | 742-265 | 6° | 0° | YES | - | - | 4 (E) | 1 5/8"⊡ | ±125' | (E) CABLE LADDER | NO |
| GSM 850 | | | | | | 8° | | | TT19-065P111-001 | | | | | | |
| LTE 700/AWS | 50° | ±85'-0" | 1 | KMW | AM-X-CD-16-65-00T | 5° | 0° | YES | - | 2 (E) | (E) | FIBER | ±100' | (E) CABLE LADDER | NO |
| LTE 700/AWS | | | | | | 5° | | | - | | | | | | |
| UMTS 1900 | 50° | 100'-0" | 1 | KATHREIN | 742-265 | 4° | 2° | YES | - | - | 2 (E) | 1 5/8"⊡ | ±125' | (E) CABLE LADDER | YES |
| UMTS 850 | | | | | | 10° | | | TT19-065P111-001 | | | | | | |

△1

## EXISTING RF SCHEDULE

22x34 SCALE: NTS | 11x17 SCALE: NTS

3

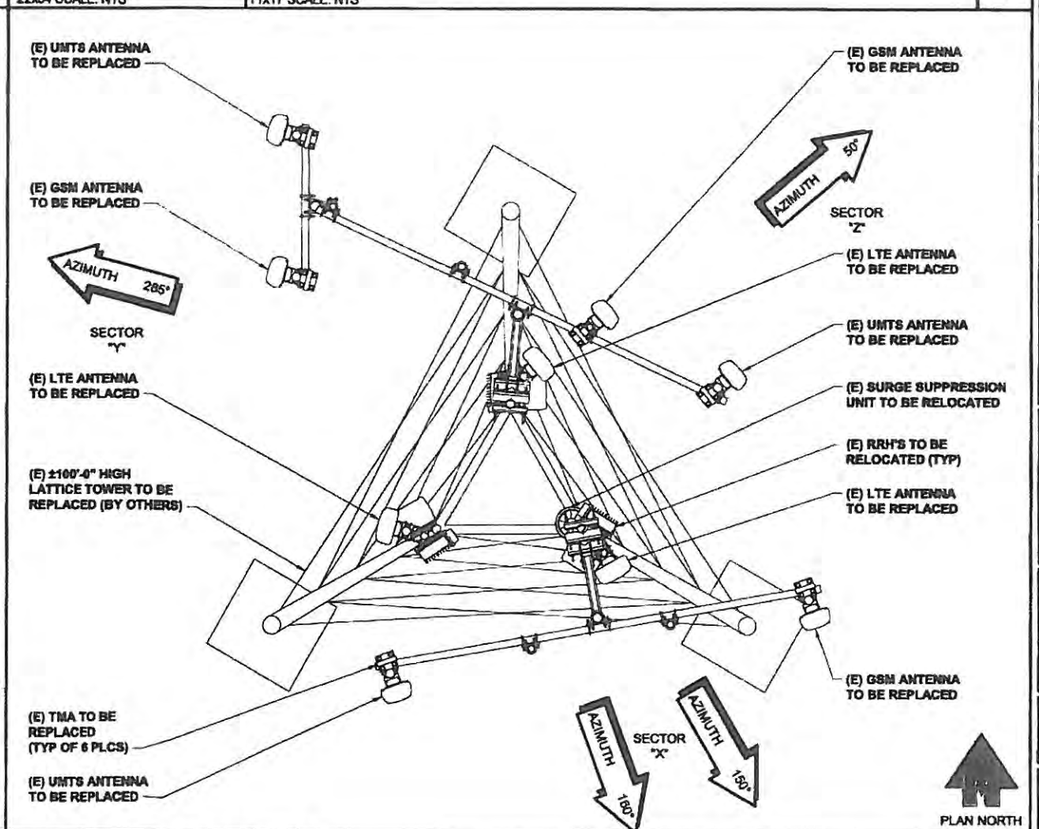


## EXISTING ANTENNA PLAN

22x34 SCALE: 1/2" = 1'-0" | 11x17 SCALE: 1/4" = 1'-0"

1

at&t Your world. Delivered.

PLANS PREPARED BY:


CORNERSTONE ENGINEERING, INC.
18928 WOODINVILLE-REDMOND RD NE, SUITE 210
WOODINVILLE, WA 98072
PHONE: 425.487.1732
EMAIL: cei@cornerstone-engr.com
WWW.CORNERSTONE-ENGR.COM


PROJECT INFO:

YA01

SELAH

2.3 MILES SOUTHEAST CRUSHER CANYON
SELAH, WA 98942
YAKIMA COUNTY

ISSUED FOR:

CONSTRUCTION

| REV: | DATE: | ISSUED FOR: | BY: |
|---|---|---|---|
| △5 | 03-25-16 | REVIEW COMMENTS | AJB |
| △4 | 02-29-16 | PER COMMENTS | LJS |
| △3 | 02-01-16 | FINAL, PER CITY COMMENTS | LJS |
| △2 | 01-18-16 | FINAL, PER CLIENT REVISION | DRA |

| DRAWN BY: | CHK.: | APV.: |
|---|---|---|
| JRF | MWO | MWO |

CURRENT ISSUE DATE:

03-25-16

LICENSURE:

JURISDICTIONAL APPROVAL:

PROPRIETARY INFORMATION:


DO NOT SCALE DRAWINGS. CONTRACTOR MUST VERIFY ALL DIMENSIONS AND ADVISE CONSULTANTS OF ANY ERRORS AND OMISSIONS. ALL PREVIOUS ISSUES OF THIS DRAWING ARE SUPERSEDED BY THE LATEST REVISION. THE INFORMATION CONTAINED IN THIS SET OF DOCUMENTS IS PROPRIETARY BY NATURE. ANY USE OR DISCLOSURE OTHER THAN WHICH IS RELATED TO NAMED CLIENT IS STRICTLY PROHIBITED.


DRAWING TITLE:

EXISTING & PROPOSED ANTENNA PLANS

DRAWING NUMBER:

RF-1 | 5

CEI JOB NUMBER: LTE 3C/4C 14-13046

## NOT USED
22x34 SCALE: NTS | 11x17 SCALE: NTS | 12

## NOT USED
22x34 SCALE: NTS | 11x17 SCALE: NTS | 11

## GROUND LUG CONNECTION
22x34 SCALE: NTS | 11x17 SCALE: NTS | 9

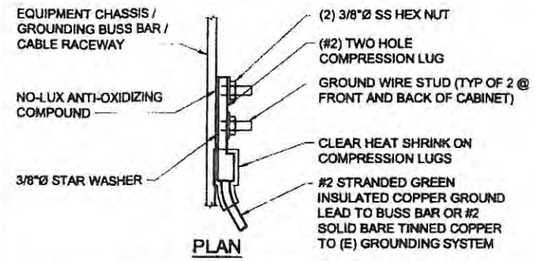


**NOTE:**
FOR GROUNDING CONNECTIONS TO PAINTED CABINETS CHASSIS, GRIND OFF ALL ENAMEL COATINGS TO BARE METAL AT LUG CONTACT AREA PRIOR TO MAKING BOLTED LUG CONNECTION. APPLY NO-LUX TO ALL EXPOSED BARE METAL.

**HYLUG CONNECTOR INSTALLATION INSTRUCTIONS:**

1. SELECT PROPER HYLUG FOR THE WIRE SIZE USED.
2. STRIP CABLE OF INSULATION TO A LENGTH EQUAL TO THE BARREL OF THE CONNECTOR.
3. INSERT CABLE FULLY INTO CONNECTOR.
4. APPLY THE PROPER NUMBER OF CRIMPS AS SHOWN BY NUMBER OF COLORED BANDS.
5. CRIMP FROM TONGUE END OF CONNECTOR TOWARD CABLES FOR TERMINALS AND CENTER SPLICE TOWARD CABLE FOR BUTT SPLICES REQUIRING MORE THAN ONE CRIMP PER END.

HYLUG TYPE YGA CONNECTOR IS PRE-FILLED WITH PENETROX COMPOUND AND STRIP SEALED.

BURNDY HYDRAULIC DIE SET #U1CRT-1/U11T.

## GROUND BUSS BAR
22x34 SCALE: NTS | 11x17 SCALE: NTS | 7

**GROUND BAR ATTACHMENT:**

| | |
|---|---|
| CONCRETE SUBSTRATE: | (4) 3/8"Ø HILTI TZ EXPANSION ANCHORS WITH 2" MINIMUM EMBEDMENT. |
| WOOD FRAMED SUBSTRATE: | (4) 3/8"Ø LAG SCREWS WITH 2" MINIMUM EMBEDMENT (ADD BLOCKING IF NECESSARY. |
| SOLID CMU WALL: | (4) 3/8"Ø HILTI TZ EXPANSION ANCHORS WITH 2" MINIMUM EMBEDMENT. |
| HOLLOW CMU WALL: | (4) 3/8"Ø HILTI HIT HY-20 WITH HIT-A STANDARD RODS. (3 3/8" EMBEDMENT) |

**NOTE:**
COAT ALL MECHANICAL CONNECTIONS W/ "NO-LUX" OR APPROVED EQUAL

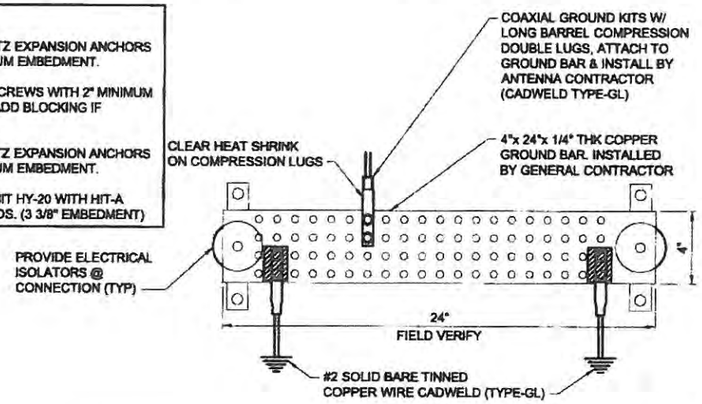


## NOT USED
22x34 SCALE: NTS | 11x17 SCALE: NTS | 6

## NOT USED
22x34 SCALE: NTS | 11x17 SCALE: NTS | 5

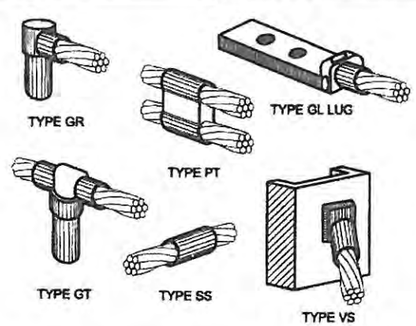


**NOTE:**
CADWELD "TYPES" SHOWN ABOVE ARE EXAMPLES - CONSULT WITH PROJECT MANAGER FOR SPECIFIC TYPES OF CADWELDS TO BE USED FOR THIS PROJECT.

## CADWELD DETAIL
22x34 SCALE: NTS | 11x17 SCALE: NTS | 4

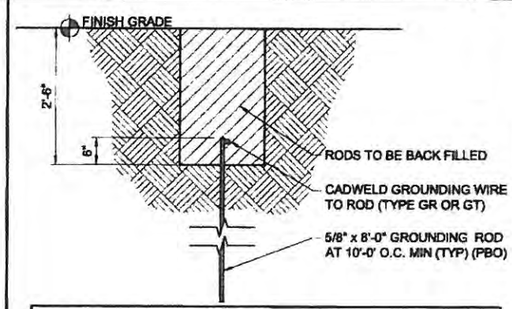


**NOTE**
ELECTRICAL CONTRACTOR SHALL ORDER INDEPENDENT LAB TEST TO DETERMINE GROUND RESISTANCE AND REPORT TO AT&T REPRESENTATIVE. NOTIFY AT&T IMMEDIATELY IF RESISTANCE EXCEEDS 5 OHMS. ELECT. CONTRACTOR SHALL DETERMINE FROM TEST NUMBER OF RODS REQUIRED. COVER AND WELL ON DWG. 1 IS TYPICAL OF (1) ROD. ALL OTHER RODS REQUIRED ARE TO BE BACK FILLED.

## GROUND ROD DETAIL
22x34 SCALE: NTS | 11x17 SCALE: NTS | 3

## NOT USED
22x34 SCALE: NTS | 11x17 SCALE: NTS | 2

## NOT USED
22x34 SCALE: NTS | 11x17 SCALE: NTS | 1

at&t
Your world. Delivered.

PLANS PREPARED BY:


CORNERSTONE ENGINEERING, INC
16928 WOODINVILLE-REDMOND RD NE, SUITE 210
WOODINVILLE, WA 98072
PHONE: 425.487.1732
EMAIL: ps@cornerstone-engr.com
WWW.CORNERSTONE-ENGR.COM


PROJECT INFO:

YA01

SELAH

2.3 MILES SOUTHEAST CRUSHER CANYON
SELAH, WA 98942
YAKIMA COUNTY

ISSUED FOR:

CONSTRUCTION

| REV: | DATE: | ISSUED FOR: | BY: |
|---|---|---|---|
| 5 | 03-25-16 | REVIEW COMMENTS | AJB |
| 4 | 02-29-16 | PER COMMENTS | LJS |
| 3 | 02-01-16 | FINAL, PER CITY COMMENTS | LJS |
| 2 | 01-18-16 | FINAL, PER CLIENT REVISION | DRA |

| DRAWN BY: | CHK.: | APV.: |
|---|---|---|
| JRF | MWO | MWO |

CURRENT ISSUE DATE:

03-25-16

LICENSURE:

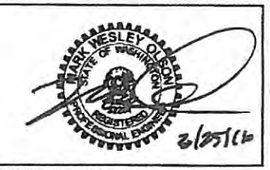


JURISDICTIONAL APPROVAL:

PROPRIETARY INFORMATION:


DO NOT SCALE DRAWINGS. CONTRACTOR MUST VERIFY ALL DIMENSIONS AND ADVISE CONSULTANTS OF ANY ERRORS AND OMISSIONS. ALL PREVIOUS ISSUES OF THIS DRAWING ARE SUPERSEDED BY THE LATEST REVISION. THE INFORMATION CONTAINED IN THIS SET OF DOCUMENTS IS PROPRIETARY BY NATURE. ANY USE OR DISCLOSURE OTHER THAN WHICH IS RELATED TO NAMED CLIENT IS STRICTLY PROHIBITED.


DRAWING TITLE:

GROUNDING DETAILS

DRAWING NUMBER:

E-1.1 | 5

CEI JOB NUMBER: LTE 3C/4C 14-13046

## TOWER DESIGN LOADS:

OPTION #1 - PROPOSED TOWER WITH
- PROPOSED ANTENNAS
- ANALYSIS PER TIA-222-G
- 85 MPH WIND & NO ICE
- 40 MPH WIND & 1/4" ICE
- STRUCTURAL CLASS III
- EXPOSURE CATEGORY C
- TOPOGRAHIC CATEGORY 3
- CREST HEIGHT 686' FT
- YAKIMA COUNTY, WA

## SITE INFORMATION:

- LATITUDE: 46° 37' 50.21" N
- LONGITUDE: 120° 32' 05.96" W

- LOOKOUT POINT RD
  SELAH, WA 98942

ERIC J. HEINE
STATE OF WASHINGTON
40161
REGISTERED
PROFESSIONAL ENGINEER
8/4/15

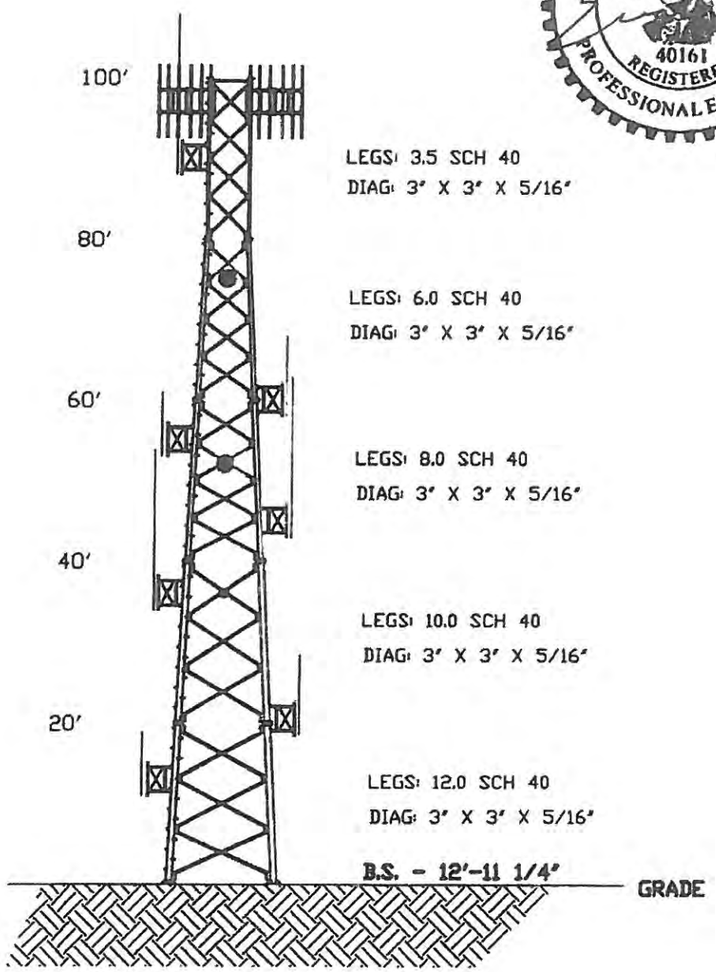


EHRESMANN ENGINEERING, INC.
CONSULTING ENGINEERS
4400 WEST 31ST STREET
YANKTON, SD 57078
(605) 665-7532
(605) 665-9780

| ELEV. | ITEM | RAD. | AZ. | LINE |
|---|---|---|---|---|
| 100' | (3) 3' SIDEARMS | — | — | — |
| 100' | 3" X 18' OMNI ANTENNA | — | — | 1/2" |
| 100' | 3" X 6' OMNI ANTENNA | — | — | 1/2" |
| 100' | 2" X 2' OMNI ANTENAA | — | — | 1/4" |
| 97' | (3) 14' EEI T-FRAMES | — | — | |
| 97' | (18) 9442 RRH | — | — | |
| 97' | (3) DC6-48 60-18-8F | — | — | (24x) 1 5/8" |
| 97' | (12) TT08-19DB111-001 TMA | — | — | |
| 97' | (15) BSA-M65-19R010-02 | — | — | |
| 97' | 2" X 10' OMNI ANTENNA | — | — | 1 5/8" |
| 97' | 3" X 18' OMNI ANTENNA | — | — | 1 5/8" |
| 95' | (2) 3' SIDEARMS | — | — | — |
| 95' | 3" X 18' OMNI ANTENNA | — | — | 1 5/8" |
| 95' | 2" X 10' OMNI ANTENNA | — | — | 1 5/8" |
| 90' | 3' SIDEARM | — | — | — |
| 90' | 20' 4-BAY DIPOLE | — | — | 1/2" |
| 75' | 2' DISH | YES | — | 1/4" |
| 60' | 3' SIDEARM | — | — | — |
| 60' | 1' X 1' X 6' TMA | — | — | — |
| 60' | 2' X 6' X 3' PANEL ANTENNA | — | — | 1/4" |
| 56' | 3' SIDEARM | — | — | — |
| 56' | 8' X 1' X 6' PANEL | — | — | 1/4" |
| 55' | 3' SIDEARM | — | — | — |
| 55' | 1' X 4" X 2' PANEL ANTENNA | — | — | 1/4" |
| 52' | 2' DISH | YES | — | 1/4" |
| 50' | VHLP1-23 | — | — | CAT 5 |
| 46' | 3' SIDEARM | — | — | — |
| 46' | BMR10 | — | — | 7/8" |
| 45' | 3' SIDEARM | — | — | — |
| 45' | 20' 1-BAY DIPOLE | — | — | LMR-400 |
| 37' | VHP2-180B-111 | — | — | EW180 |
| 36' | 3' SIDEARM | — | — | — |
| 36' | 20' 2-BAY DIPOLE | — | — | 1/2" |
| 36' | 1' HP DISH | YES | — | 1/4" |
| 35' | VHLPX2-18 | — | — | CAT 5 |
| 26' | HP6-59 | YES | — | LMR-400 |
| 25' | VHLP4-11 | — | — | EW90 |
| 21' | 3' SIDEARM | — | — | — |
| 21' | 1' X 4" PANEL ANTENNA | — | — | 1/4" |
| 20' | VHL-P2-18 | — | — | EW180, CNT-400 |
| 19' | 3' SIDEARM | — | — | — |
| 19' | BMR10 | — | — | 7/8" |
| 16' | VHLPX-4-18 | — | — | EW90 |
| 13' | 3' SIDEARM | — | — | — |
| 13' | 2" X 8' OMNI ANTENNA | — | — | 1/2" |

**NOTES:**

1. TOWER DESIGNED ACCORDING TO TIA-222-G.
2. ANTENNA LOADS FROM MANUFACTURING SPECIFICATIONS AND ANDREWS BULLETIN 1015F.
3. WELDED CONNECTIONS SHALL CONFORM TO THE LATEST REVISION OF THE AMERICAN WELDING SOCIETY, A.W.S. D 1.1.
4. ALL TOWER MEMBERS SHALL BE HOT-DIP GALVANIZED AFTER FABRICATION. GALVANIZING SHALL CONFORM TO ASTM A123.
5. ALL BOLTS SHALL BE GALVANIZED ACCORDING TO THE STANDARD SPECIFICATION FOR ZINC COATING OF IRON AND STEEL HARDWARE, ASTM A153.
6. BOLTS
   A. BOLTS IN TENSION ASTM A325
   B. STEP BOLTS ASTM A307
7. ALL ITEMS MUST BE INVENTORIED AT THE TIME OF DELIVERY TO THE JOB SITE/STORAGE FACILITY. ANY SHORTAGES REPORTED AFTER THIS DELIVERY WILL BE THE RESPONSIBILITY OF THE CONTRACTOR/OWNER

   ANY PROBLEMS THAT OCCUR WITH SCHEDULING, TRANSPORTATION, DELIVERY, FOUNDATION INSTALLATION, ERECTION OR ANY ITEMS FURNISHED BY EEI MUST BE REPORTED IMMEDIATELY TO ALLOW EEI TIME TO TAKE CORRECTIVE MEASURES. EEI WILL MAKE EVERY EFFORT TO REPAIR/REPLACE NECESSARY ITEMS IN AN EXPEDITED MANNER AND/OR WILL PURSUE CORRECTIVE MEASURES IN THE MOST ECONOMICAL WAY POSSIBLE AT OUR DISCRETION. HOWEVER, UNDER NO CIRCUMSTANCES WILL EEI PAY FOR OR BE RESPONSIBLE FOR ANY DOWN TIME OR EXPENSES INCURRED DUE TO DOWN TIME.
8. TOWER LEGS SHALL BE 50 KSI. ALL OTHER STEEL SHALL BE ASTM A36 MINIMUM.

THESE DRAWINGS AND SPECIFICATIONS ARE THE PROPERTY OF EHRESMANN ENGINEERING, INC. AND SHALL NOT BE REPRODUCED OR USED IN WHOLE OR IN PART AS THE BASIS OF THE MANUFACTURE OR SALE OR ITEM(S) WITHOUT WRITTEN PERMISSION.

SITE: YA01 SELAH, WA

**100' EHRESMANN SELF SUPPORTING TOWER**

EHRESMANN ENGINEERING, INC.
CONSULTING ENGINEERS
4400 WEST 31st. STREET
YANKTON, SD 57078
(605) 665-7532
(605) 665-9780

DATE: 07/31/15
BY: TR
CHECKED:

J.O. 94740 | DWG # 94740-C1 | SHT C1 OF

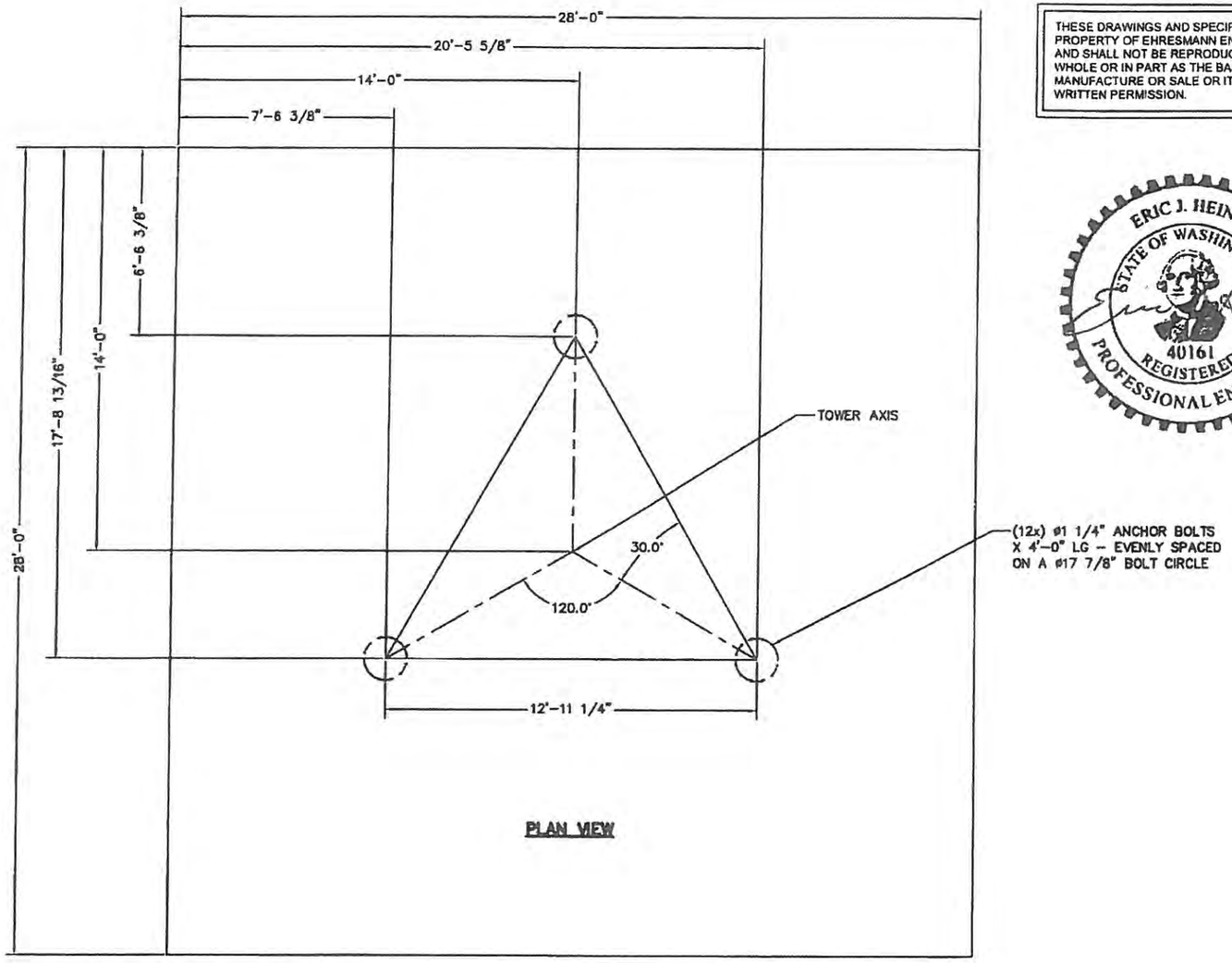


PLAN VIEW

THESE DRAWINGS AND SPECIFICATIONS ARE THE PROPERTY OF EHRESMANN ENGINEERING, INC. AND SHALL NOT BE REPRODUCED OR USED IN WHOLE OR IN PART AS THE BASIS OF THE MANUFACTURE OR SALE OR ITEM(S) WITHOUT WRITTEN PERMISSION.

MATERIAL LIST

| ITEM | QTY | GRADE | DESCRIPTION | |
|---|---|---|---|---|
| A | 58 | 60 KSI | #8 BARS (29x) EACH WAY (TOP) | 27'-6" |
| B | 58 | 60 KSI | #8 BARS (29x) EACH WAY (BOTTOM) | 27'-6" |
| C | 56 | 60 KSI | #6 BARS | 6" \| 3'-2" \| 6" |
| D | 36 | 105 KSI | 1 1/4"ø 105 KSI 4'-0" LONG AND 12" OF THREAD | 4'-0" |

QUANTITIES SHOWN ARE FOR ONE (1) SPREAD FOOTING FOUNDATION AS SHOWN.

**NOTES:**

1.) CONCRETE SHALL ATTAIN ULTIMATE COMPRESSION STRENGTH OF 4000 PSI AT 28 DAYS.
2.) REINFORCING STEEL SHALL CONFORM TO ASTM A615 GRADE SPECIFICATIONS.
3.) 3" MINIMUM CONCRETE COVER ON ALL REINFORCING STEEL.
4.) SIDES OF EXCAVATIONS MAY REQUIRE TO BE BRACED OR SLOPED BACK AS REQUIRED FOR STABILITY AND IN ACCORDANCE WITH ALL APPLICABLE SAFETY REGULATIONS.
5.) DESIGN BASED ON SOILS REPORT BY MORRISON HERSHFIELD CORPORATION; DATED APRIL 1, 2013; PROJECT NO. 10623-A SELAH. CONTRACTOR TO REVIEW SOILS REPORT FOR POSSIBLE SPECIAL INSTRUCTIONS BY GEOTECHNICAL ENGINEERS.
6.) REINFORCING STEEL MEMBERS ARE TO BE EVENLY SPACED.
7.) STEEL AND CONCRETE QUANTITIES SHOWN ARE TOTAL FOR ONE SPREAD FOUNDATION AS SHOWN.
8.) IT IS THE CONTRACTOR'S RESPONSIBILITY TO INSURE THAT ALL PRACTICES AND PROCEDURES UTILIZED DURING WORK REQUIRED ON THE FOUNDATION DO NOT ENDANGER THE SAFETY OF ANY PERSONNEL NOT THE STRUCTURAL INTEGRITY OF THE FOUNDATION.
9.) ALL BACK FILL TO BE PLACED IN 6" LIFTS AND COMPACTED TO ASTM D-1557 STANDARDS.
10.) EXPOSED EDGES OF FOUNDATION TO BE CHAMFERED 1" X 45°.
11.) ACI STANDARDS APPLY TO BENDING REINFORCING STEEL. (ACI 318-LATEST EDITION SECTION 7.2)
12.) USE STEEL TEMPLATES PROVIDED BY EEI FOR PROPER ANCHOR BOLT PLACEMENT.
13.) REFERENCE EEI "TERMS AND CONDITIONS RELATED TO SALES" AND "ANCHOR ROD TIGHTENING" SHEETS FOR ADDITIONAL NOTES.

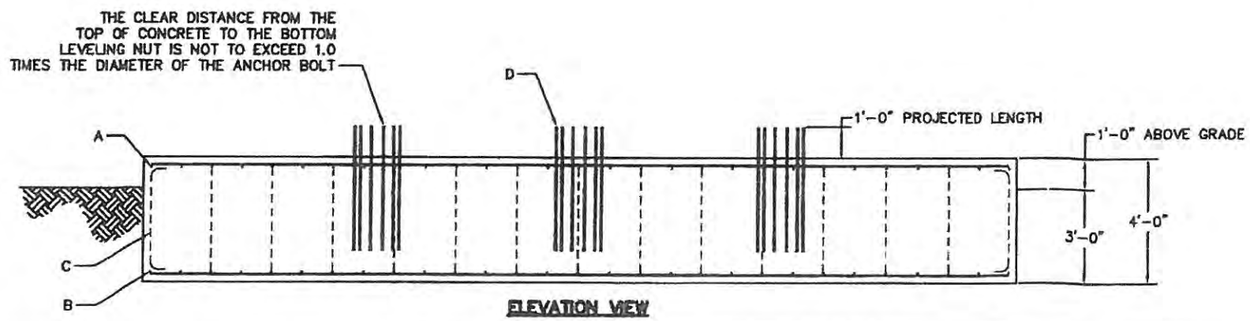


ELEVATION VIEW

**DESIGN REACTIONS:**

TOTAL SHEAR = 68.641 KIPS
MAX. UPLIFT PER LEG = 352.276 KIPS
MAX. COMP. PER LEG = 382.585 KIPS
OVERTURNING MOMENT = 4168.973 FT KIPS
CONCRETE QTY = 116.15 CU YDS

SITE: YA01 SELAH, WA

**SPREAD FOOTING FOUNDATION**
**100' EEI SSTA**

EHRESMANN ENGINEERING, INC.
CONSULTING ENGINEERS
4400 WEST 31st. STREET
YANKTON, SD 57078
(605) 665-7532
(605) 665-9780

DATE: 07/31/15
BY: TR
CHECKED:

J.O. 94740 | DWG # 94740E01 | SHT E01 OF

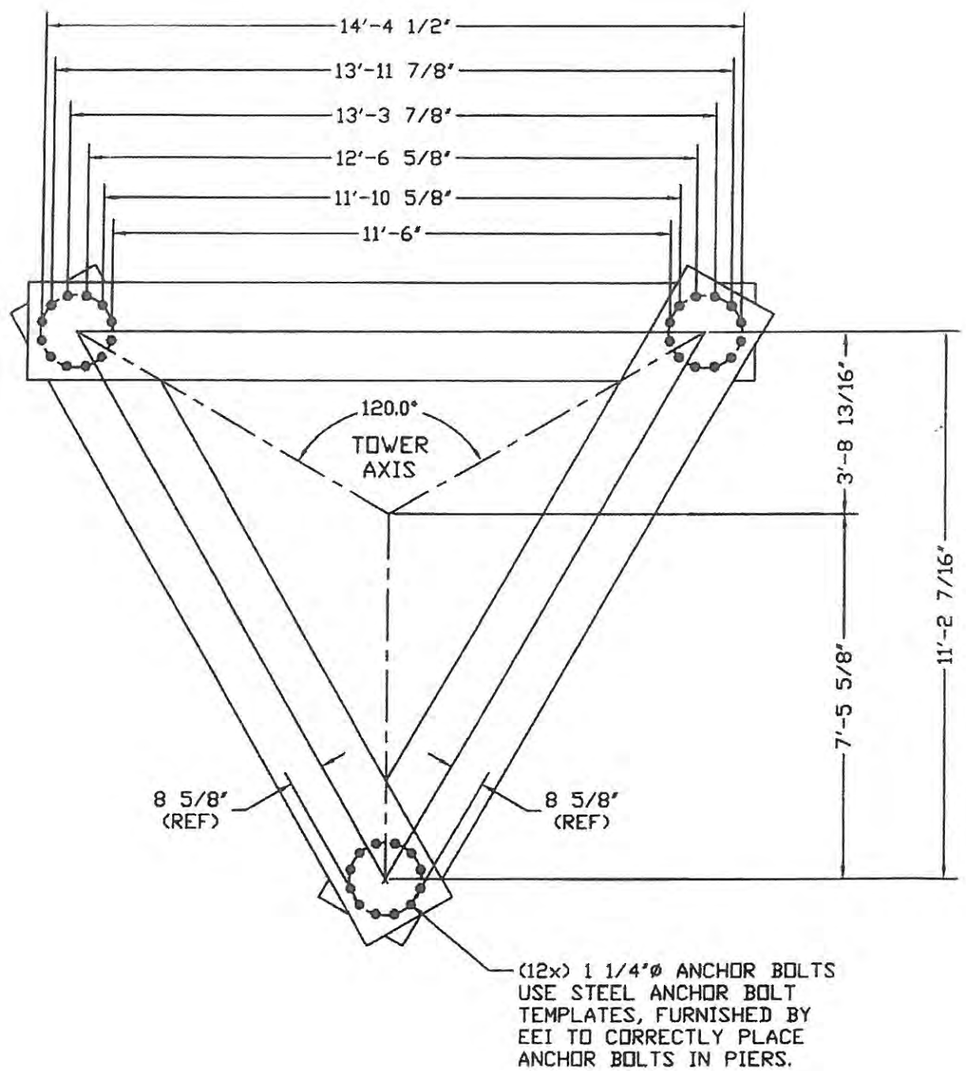


TYPICAL PLAN VIEW ANCHOR BOLTS

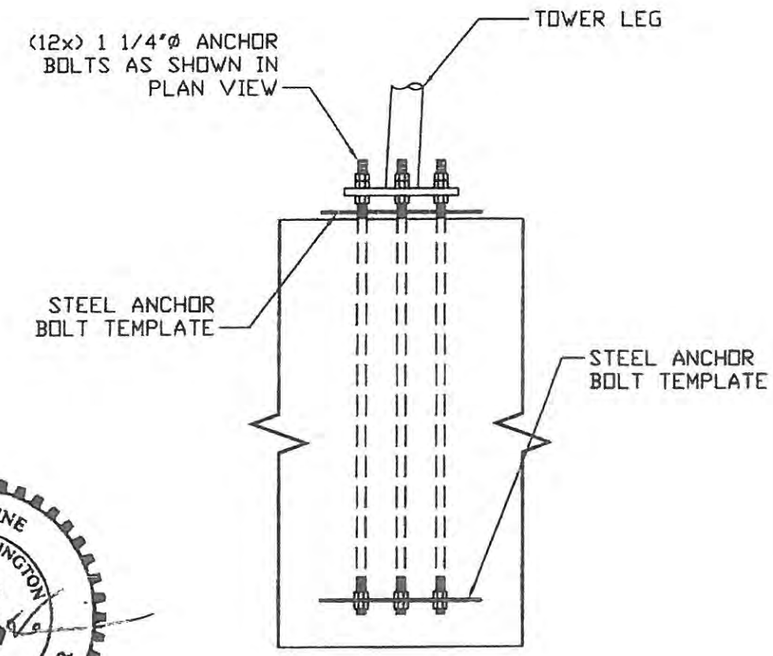


BASE PLATE SETTING

ERIC J. HEINE
STATE OF WASHINGTON
40161
REGISTERED
PROFESSIONAL ENGINEER
8/4/15

**NOTES:**

1.) SET ANCHOR BOLTS IN TEMPLATE AND EMBED IN FRESH CONCRETE.
2.) AFTER CONCRETE HAS SET REMOVE TOP TEMPLATE.
3.) SET TOWER IN PLACE USING LEVELING NUTS TO PLUMB TOWER.

THESE DRAWINGS AND SPECIFICATIONS ARE THE PROPERTY OF EHRESMANN ENGINEERING, INC. AND SHALL NOT BE REPRODUCED OR USED IN WHOLE OR IN PART AS THE BASIS OF THE MANUFACTURE OR SALE OR ITEM(S) WITHOUT WRITTEN PERMISSION.

SITE: YA01 SELAH, WA

**FOUNDATION AND TEMPLATES**

EHRESMANN ENGINEERING, INC.
CONSULTING ENGINEERS
4400 WEST 31st. STREET
YANKTON, SD 57078
(605) 665-7532
(605) 665-9780

DATE: 07/31/15
BY: TR
CHECKED:

J.O. 94740 | DWG # 94740E02 | SHT E02 OF

## Durant, Thomas

**From:** Christine Contreras <CContreras@rykaconsulting.com>
**Sent:** Monday, February 15, 2016 6:55 AM
**To:** Durant, Thomas; Graziano, Cindy
**Cc:** Groo, Caprise
**Subject:** RE: Variance and Building Permit for YA01 LTE 3C
**Attachments:** FW: AT&T Cell Site YA01 Selah: Proposed Tower Replacement

Hi Thomas,

Please also see the attached email, from our City of Yakima Landlord. It appears the second parcel listed on my application (18131113004) and the plans is the where the existing tower and proposed are located.

Let me know if you have any other questions!

Thank you,

Christine Contreras
RYKA CONSULTING
206.523.1941 Office
425.351.3392 Cell
206.260.7930 Fax
ccontreras@rykaconsulting.com
918 South Horton Street Suite 1002, Seattle, WA 98134
**VISIT OUR REVAMPED WEBSITE**
www.rykaconsulting.com

**From:** Christine Contreras
**Sent:** Friday, February 12, 2016 2:12 PM
**To:** 'Durant, Thomas'; Graziano, Cindy
**Cc:** Groo, Caprise
**Subject:** RE: Variance and Building Permit for YA01 LTE 3C

Hi Thomas,

Please my responses in red below and let me know if this answers all of your questions:

Christine Contreras
RYKA CONSULTING
206.523.1941 Office
425.351.3392 Cell
206.260.7930 Fax
ccontreras@rykaconsulting.com
918 South Horton Street Suite 1002, Seattle, WA 98134
**VISIT OUR REVAMPED WEBSITE**
www.rykaconsulting.com

EXHIBIT
tabbies
4

**From:** Durant, Thomas [mailto:tdurant@ci.selah.wa.us]
**Sent:** Friday, February 12, 2016 12:30 PM
**To:** Christine Contreras; Graziano, Cindy
**Cc:** Groo, Caprise
**Subject:** RE: Variance and Building Permit for YA01 LTE 3C

Christine:

Your payment was receipted Feb 5, which starts the clock for the steps we have to take in processing the application.

I am doing the review for complete application and have a couple of questions.

County Assessor records show that the Schwerdtfeger Trust sold parcel 181311-13005 to Forbes Mercy on 12/8/2015. My assumption is that the lease and sublease gives your clients the legal right to do this project, which is the reason that neither of the property owners signed the application. But I wanted you to be aware of the change in ownership so that if it has any affect, you can respond to it. What I don't want to have happen is for Mr. Mercy to appear at the hearing and claim that you don't have the right to do this. Also, if you think the Assessor's record is wrong. It is not common, but it happens. AT&T leases tower and ground space from the City of Yakima. The City of Yakima leases the ground space from the underlying property owner and they are working with them right now to execute a new Agreement, to show the new tower location and revise the terms of the Agreement. Our contact with the City of Yakima is Wayne Wantland, Information Technology Manager, with the City of Yakima. His phone number is (509) 575-6048, if you need to speak with him directly as well. AT&T is also working with the City of Yakima to re-paper our existing lease for a new Agreement to account for the new tower location and new terms (leases attached). The City of Yakima has equipment on the current tower, in addition to AT&T's existing equipment. The Amendment currently routing, that has been approved by the City, is to build the new tower in a new location and once construction is complete, AT&T and the City will move their equipment over to the new tower. The old tower will be dismantled in a condition that leaves it reusable, per the request of the City of Yakima. All parties have agreed to the new tower, location, and removing the old tower.

Secondly, we weren't aware that you were going to relocate the new tower on the site. We assume that doing so is necessary to prevent a lapse in service while construction is taking place. Could you confirm that is the case, and that you recognize this action will not give you the authority to locate a new tower at the old tower site? Yes, the reason we are building the new tower in a new location is so that we do not have significant down time. The City of Yakima and AT&T have both Agreed to this.

If you can confirm these items, or let me know if I am misinterpreting the application materials in any way, we can proceed to making the complete application call and schedule the hearing. The next available date for the Planning Commission is Tuesday, March 15 (the commission meets at 5:30 PM). I think that date is achievable for this action. If you deem my answers sufficient, please add AT&T's proposal to the next Planning Commission meeting, on March 15th.

I look forward to hearing from you.

Thomas R Durant
Community Planner

**From:** Christine Contreras [mailto:CContreras@rykaconsulting.com]
**Sent:** Friday, February 12, 2016 8:58 AM
**To:** Graziano, Cindy
**Cc:** Durant, Thomas; Groo, Caprise
**Subject:** RE: Variance and Building Permit for YA01 LTE 3C

Great, thank you!

# RECORD SURVEY NO. 44-02

S.E. ¼, N.E. ¼, SEC. 11, T.13 N., R.18 E., W.M.

YAKIMA COUNTY, WASHINGTON

2817236

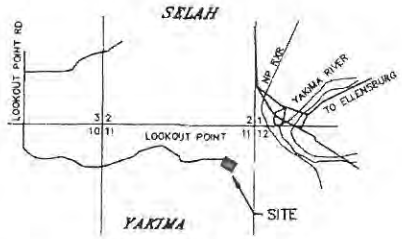


VICINITY MAP

NOT TO SCALE

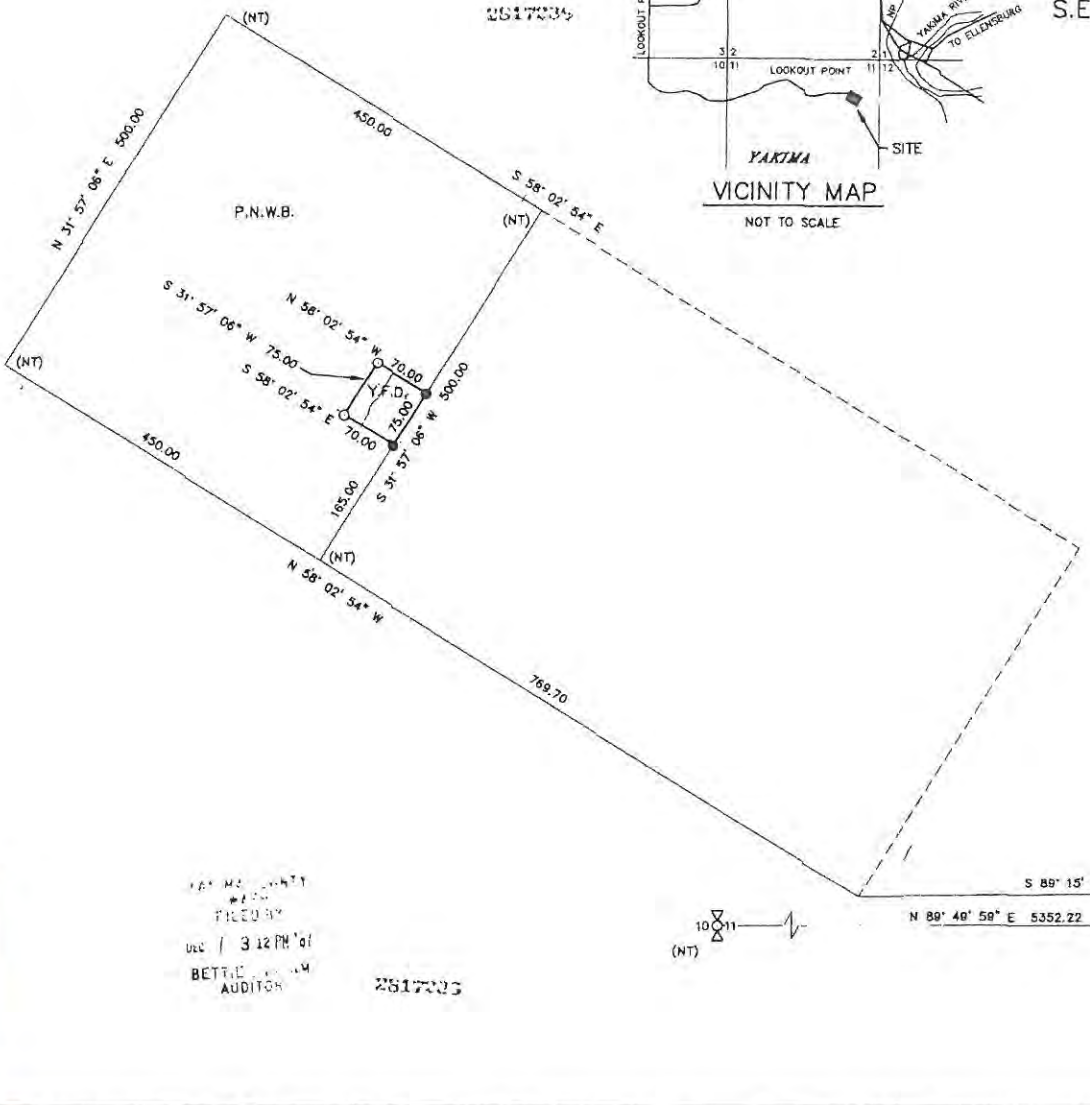


## DESCRIPTION

THAT PORTION OF THE SOUTHEAST QUARTER, OF THE NORTHEAST QUARTER, OF SECTION 11, TOWNSHIP 13 NORTH, RANGE 18 EAST, W.M., YAKIMA COUNTY, WASHINGTON, DESCRIBED AS FOLLOWS:

COMMENCING AT THE SOUTHEAST CORNER OF SAID SECTION 11, AS SHOWN ON A RECORD SURVEY, FILED UNDER AUDITORS FILE NUMBER 2752846, AND RECORDED IN BOOK 39 OF SURVEYS, AT PAGE 90, RECORDS OF YAKIMA COUNTY AUDITOR; THENCE NORTH 0° 35' 47" WEST ALONG THE EAST LINE OF SAID SECTION 2647.78 FEET; THENCE SOUTH 89° 15' 35" WEST 573.75 FEET; THENCE NORTH 58° 02' 54" WEST 769.70 FEET; THENCE NORTH 31° 57' 06" EAST 165.00 FEET TO THE TRUE POINT OF BEGINNING; THENCE NORTH 31° 57' 06" EAST 75.00 FEET; THENCE NORTH 58° 02' 54" WEST 70.00 FEET; THENCE SOUTH 31° 57' 06" WEST 75.00 FEET; THENCE SOUTH 58° 02' 54" EAST 70.00 FEET TO THE SAID TRUE POINT OF BEGINNING.

TOGETHER WITH AND SUBJECT TO EASEMENTS, RESERVATIONS AND RESTRICTIONS RECORD.

## NARRATIVE

THE PURPOSE OF THIS SURVEY IS TO MOVE THE NORTHWEST LINE OF THE YAKIMA FIRE DEPARTMENT PARCEL 20 FEET TO THE NORTHWEST. AND IS SUPPLEMENTAL TO THE SURVEY RECORDED IN BOOK 39 AT PAGE 90.

## LEGEND

● = FOUND 1/2" REBAR LS 14120

⊙ = SET 1/2" REBAR LS 14120

(NT) = NOT TIED THIS SURVEY

SCALE 1" = 100'

BASIS OF BEARING

R.S. BOOK 39 PG. 90

YAKIMA COUNTY
FILED BY
DEC 1 3 12 PM '87
BETTIE ... AUDITOR

## AUDITOR'S CERTIFICATE

FILED FOR RECORD THIS 7 DAY OF DEC, 1987 AT 12 MINUTES PAST 3 P.M. AND RECORDED IN VOLUME 44 OF SURVEYS PAGE 2 AT THE REQUEST OF ROBERT H. STRATTON, P.L.S.

YAKIMA COUNTY AUDITOR

INDEX NO.

FEE NO.

## SURVEYOR'S CERTIFICATE

I ROBERT H. STRATTON, A LICENSED LAND SURVEYOR IN THE STATE OF WASHINGTON, HEREBY CERTIFY THAT THIS MAP CORRECTLY REPRESENTS AN ACTUAL FIELD SURVEY CONDUCTED UNDER MY DIRECT SUPERVISION IN CONFORMANCE WITH THE SURVEY RECORDING ACT OF 1973, AT THE REQUEST OF YAKIMA FIRE DEPT., AND ALL BEARINGS AND DISTANCES ARE CORRECT.

Robert H. Stratton — 3 DEC 1987

ROBERT H. STRATTON LS 14120 — DATE

SURVEY FOR

*Y.F.D. & P.N.W.B.*

*SELAH, WASHINGTON*

*RE # 329*


BOB STRATTON SURVEYING
1350 GRANDRIDGE BLVD SUITE 101A
KENNEWICK, WASHINGTON 99336
(509) 735-7364


DRAWN BY: D.S. JOB # 866

DATE: 12/1/87 SHT. 1 OF 1

YFD.DWG

44-2

tabbles EXHIBIT 5

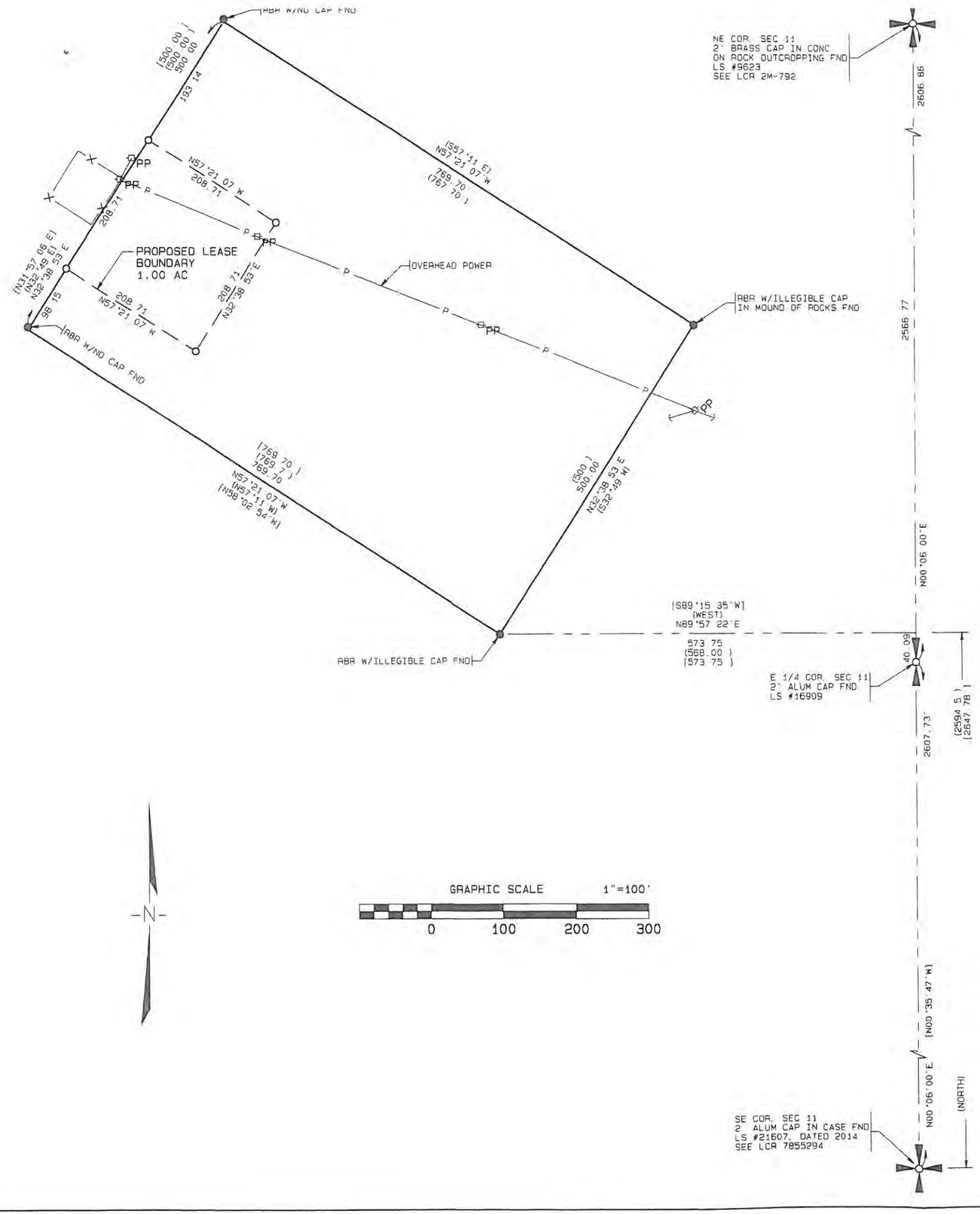


## LEGAL DESCRIPTION

THAT PORTION OF SECTION 11 TOWNSHIP 13 NORTH RANGE 18 EAST, W.M., DESCRIBED AS FOLLOWS

BEGINNING AT A POINT ON THE EAST LINE OF SAID SECTION 11, 2594.5 FEET NORTH OF THE SOUTHEAST CORNER OF SAID SECTION; THENCE WEST 568.0 FEET TO THE TRUE POINT OF BEGINNING, THENCE NORTH 57°11' WEST, 769.7 FEET, THENCE NORTH 32°49' EAST, 500 FEET, THENCE SOUTH 57°11' EAST 769.7 FEET THENCE SOUTH 32°49' WEST, 500 FEET TO THE POINT OF BEGINNING

## NOTES

1. —X— DENOTES EXISTING FENCE
2. ○ DENOTES 1/2" REBAR WITH CAP NUMBER 21607 SET
3. ● DENOTES REBAR FOUND AS NOTED
4. ⊢ DENOTES ANCHOR
5. PP DENOTES POWER POLE
6. ( ) DENOTES BEARING AND/OR DISTANCE FROM LEGAL DESCRIPTION
7. [ ] DENOTES BEARING AND/OR DISTANCE FROM ROS 39-90
8. BOUNDARY PREVIOUSLY SURVEYED AND RECORDED IN BOOK 39 OF SURVEYS, PAGE 90, RECORDS OF YAKIMA COUNTY, WASHINGTON SEE SAID SURVEY FOR FURTHER INFORMATION.
9. BEARINGS SHOWN ARE ON ASSUMED DATUM RELATIVE TO THE EAST LINE OF THE SOUTHEAST QUARTER OF SECTION 11, TOWNSHIP 13 NORTH, RANGE 18 EAST, W.M. BEING NORTH 0°06'00" EAST.
10. SURVEY PERFORMED WITH A SPECTRA PRECISION SP80 GNSS RECEIVER USING REAL TIME KINEMATIC PROCEDURES. MEASUREMENTS SHOWN HEREON ARE GROUND DISTANCES.
11. MONUMENTS SHOWN HEREON AS FOUND (FND) WERE VISITED IN OCTOBER 2015.
12. THIS SURVEY DOES NOT PURPORT TO SHOW ALL EASEMENTS WHICH MAY ENCUMBER OR BE APPURTENANT TO THE PARCEL SURVEYED

## SURVEYOR'S CERTIFICATE

THIS MAP CORRECTLY REPRESENTS A SURVEY MADE BY ME OR UNDER MY DIRECTION IN CONFORMANCE WITH THE REQUIREMENTS OF THE SURVEY RECORDING ACT AT THE REQUEST OF FORBES MERCY IN OCTOBER 2015

DONALD H. WILTON
STATE OF WASHINGTON
21607
REGISTERED
PROFESSIONAL LAND SURVEYOR
DHW 12-31-15

## AUDITOR'S CERTIFICATE

FILED FOR RECORD THIS 31 DAY OF December 20 15 AT 10:00 A.M. AS SURVEY NUMBER 7896107 AT THE REQUEST OF DON WILTON SURVEYING

Charles Ross
YAKIMA COUNTY AUDITOR

BY DEPUTY

SUR 7896107

| | | |
|---|---|---|
| DON WILTON SURVEYING<br>PO BOX 2275 YAKIMA, WA 98907 | | 509-454-8195 |
| BDW<br>DRAWN | BOUNDARY SURVEY<br>FOR<br>FORBES MERCY<br>SELAH, WA | 11<br>T 13 N, R 18 EWM |
| OCT 5, 2015<br>DATE DRAWN | | JOB NO. 15072 |
| OCT 2, 2015<br>SURVEY DATE | | |
| 1 OF 1<br>SHEET | | |

# WASHINGTON DEPARTMENT OF FISH AND WILDLIFE
# PRIORITY HABITATS AND SPECIES REPORT

EXHIBIT 6 tabbies

SOURCE DATASET: PHSPlusPublic
REPORT DATE: 02/12/2016 10.47

Query ID: P160212104708

| Common Name<br>Scientific Name<br><br>Notes | Site Name<br>Source Dataset<br>Source Record<br><br>Source Date | Priority Area<br>Occurrence Type<br>More Information (URL)<br>Mgmt Recommendations | Accuracy | Federal Status<br>State Status<br>PHS Listing Status | Sensitive Data<br>Resolution | Source Entity<br>Geometry Type |
|---|---|---|---|---|---|---|
| Shrub-steppe | LOOKOUT POINT<br>PHSREGION<br>901728 | Terrestrial Habitat<br>N/A<br><br>N/A | 1/4 mile (Quarter | N/A<br>N/A<br><br>PHS LISTED | N<br>AS MAPPED | WA Dept. of Fish and Wildlife<br>Polygons |

DISCLAIMER. This report includes information that the Washington Department of Fish and Wildlife (WDFW) maintains in a central computer database. It is not an attempt to provide you with an official agency response as to the impacts of your project on fish and wildlife. This information only documents the location of fish and wildlife resources to the best of our knowledge. It is not a complete inventory and it is important to note that fish and wildlife resources may occur in areas not currently known to WDFW biologists, or in areas for which comprehensive surveys have not been conducted. Site specific surveys are frequently necesssary to rule out the presence of priority resources. Locations of fish and wildlife resources are subject to vraition caused by disturbance, changes in season and weather, and other factors. WDFW does not recommend using reports more than six months old.

# WDFW Test Map

February 12, 2016

PHS Report Clip Area
PT
LN
AS MAPPED
SECTION
QTR-TWP
TOWNSHIP

1:19,842

0 0.15 0.3 0.6 mi

0 0.275 0.55 1.1 km

EXHIBIT 6A

tabbies

DFW

## Durant, Thomas

**From:** Downes, Scott G (DFW) <Scott.Downes@dfw.wa.gov>
**Sent:** Wednesday, March 02, 2016 4:08 PM
**To:** Durant, Thomas
**Subject:** RE: Communication Tower Lookout Point Selah

Thomas,
Forbes Mercy asked a similar question of this area last year, I don't know if this is his application that you are reviewing or not. I'm copying my email response to him from October 9, 2015 below as the same response would pretty much apply to this one.

Thanks for checking.

Scott

***Scott Downes***
Fish & Wildlife Habitat Biologist
Washington Department of Fish and Wildlife
Region 3 Habitat Program
1701 South 24th Ave
Yakima, WA 98902-5720
Scott.Downes@dfw.wa.gov
Office-509-457-9307
Cell-509-607-3578

**********
**********

Mr. Mercy,
We appreciate that you provided us advanced opportunity to review and comment on your proposed radio tower on Lookout Point near Selah Gap. I reviewed our records in that area and while the area is mapped as a shrub-steppe area of concern, it is somewhat isolated from other shrub-steppe habitat and bordered by other development. Thus, I do not believe that your facility is likely to have much additional cumulative impact from what is already there, especially since you are co-locating your tower near existing towers. While parts of this shrub-steppe area have burned in the recent past, it continues to provide habitat for wildlife moving between Selah Gap, the riparian corridors near the streams, and areas further east and west. WDFW would like to see efforts to reduce the overall footprint to the maximum extent possible and minimize fire risk. Perhaps this has already occurred, but if not consider trying to place the tower as near to the other two existing towers as possible to reduce further impacts to habitat.

Spread of invasive weeds and fire issues are a concern. We would like to see management practices (revegetation of disturbed soils using native plant species) applied to reduce the spread of noxious, invasive weeds in this area and fire safety practices to ensure that construction and maintenance of the tower does not lead to increase fire risk for the shrub-steppe surrounding the site.

I'm happy to answer additional questions that you may have.

Thanks,

Scott

EXHIBIT
tabbies
7

***Scott Downes***
Fish & Wildlife Habitat Biologist
Washington Department of Fish and Wildlife
Region 3 Habitat Program
1701 South 24th Ave
Yakima, WA 98902-5720
Scott.Downes@dfw.wa.gov
Office-509-457-9307
Cell-509-607-3578

**From:** Durant, Thomas [mailto:tdurant@ci.selah.wa.us]
**Sent:** Wednesday, March 02, 2016 11:24 AM
**To:** Downes, Scott G (DFW)
**Subject:** Communication Tower Lookout Point Selah

Scott

Eric Bartrand referred me to you. Selah is processing an application to replace an existing 100' communication tower on Lookout Point with a tower of similar height and dimension in the same fenced area but about 50 feet away. It appears to be very near a PHS area labeled shrub-steppe. Do you have any comments or concerns about this?

This is scheduled to go to the Planning Commission in two weeks. I apologize for the short notice, but it is exempt under SEPA as the replacement of an existing communication tower.

If you need more specifics, let me know.

Thank you

Thomas R Durant

Phone: 698-7365, if you call ask for either me or Harmit Bedi.

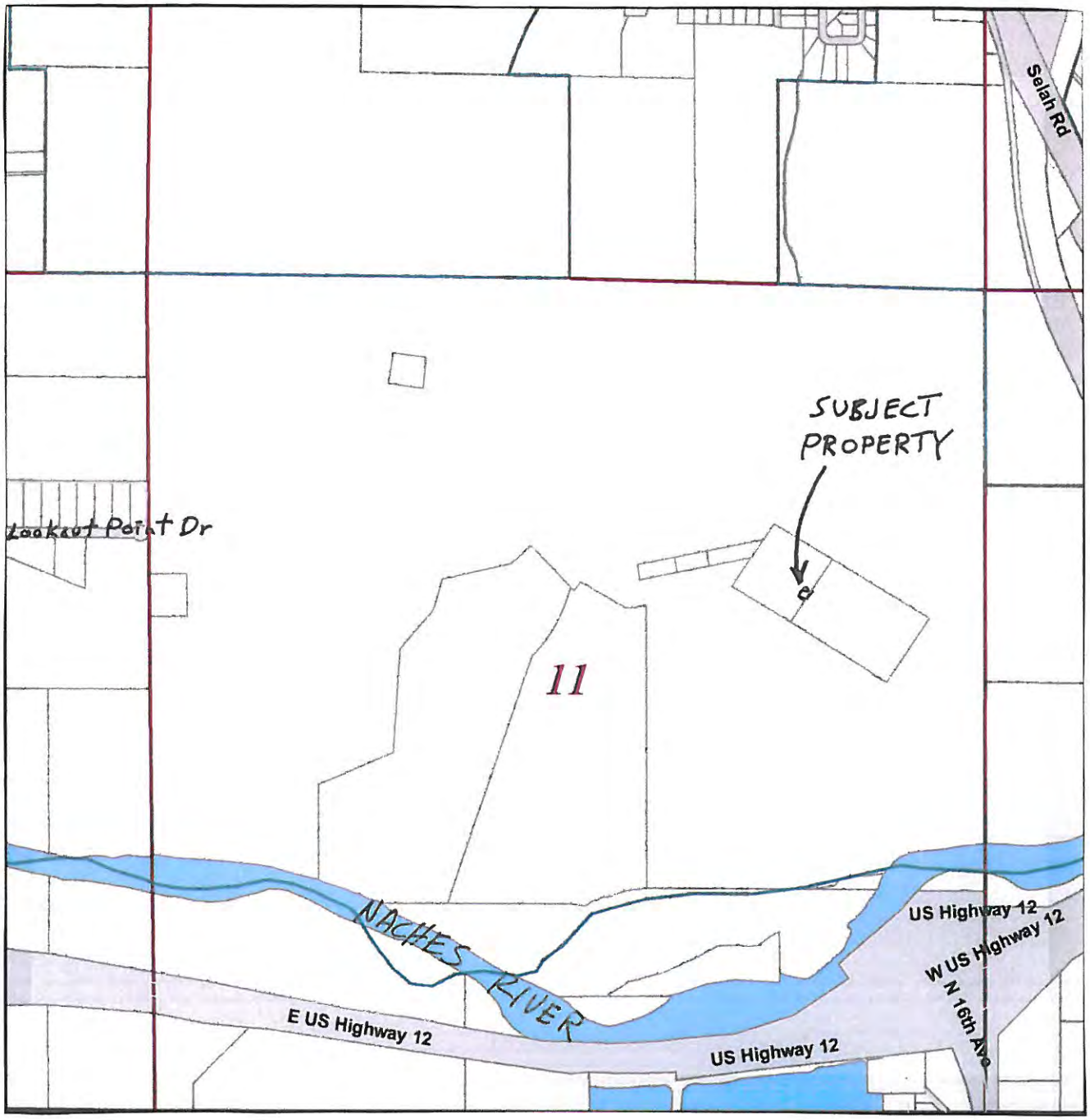


SUBJECT PROPERTY SCALE: 1" = 1,000'

**APPLICATION: Height Variance for Communication Tower**

**APPLICANT: NEW CINGULAR WIRELESS/AT&T MOBILITY/ RYKA**

EXHIBIT

tabbies

8

Yakima County GIS - Washington

# Land Information Portal

[Print Map]
[Close Map]

Yakimap.com

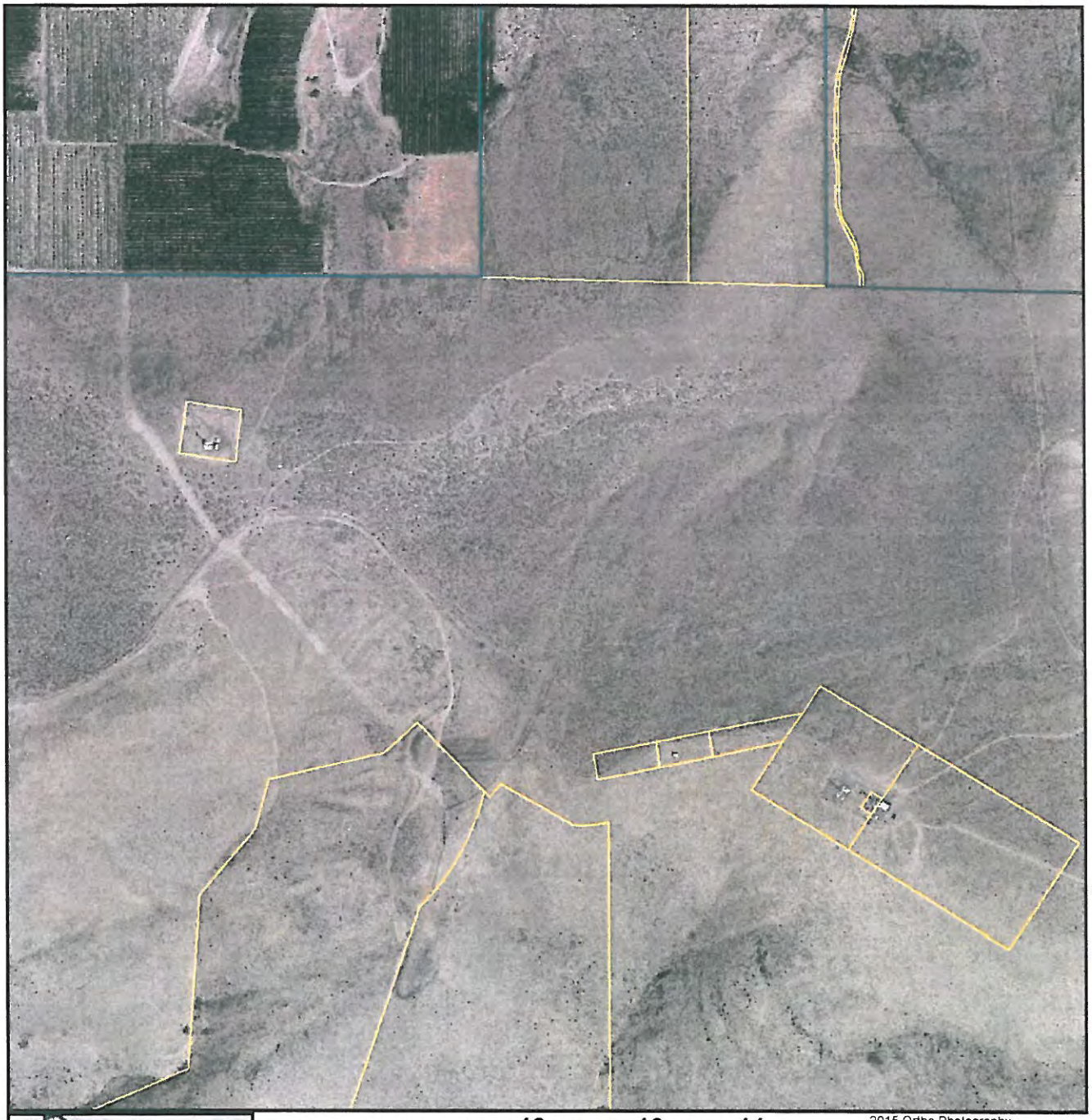

Map Center: **Range:18 Township:13 Section:11**

2015 Ortho Photography

City Limits
Sections

**WWW.YAKIMAP.COM**
**Yakima County GIS**
**128 N 2nd Street**
**Yakima, WA 98901**
**(509)574-2992**

**One Inch = 600 Feet**

**Feet 250 500 750 1000**

MAP AND PARCEL DATA ARE BELIEVED TO BE ACCURATE, BUT ACCURACY IS NOT GUARANTEED, THIS IS NOT A LEGAL DOCUMENT AND SHOULD NOT BE SUBSTITUTED FOR A TITLE SEARCH, APPRAISAL, SURVEY, FLOODPLAIN OR ZONING VERIFICATION

Copyright (C) Yakima County GIS

EXHIBIT
9

**NOTICE OF DEVELOPMENT APPLICATION**
**OPPORTUNITY TO PROVIDE COMMENTS**
**NOTICE OF PLANNING COMMISSION OPEN RECORD PUBLIC HEARING**

File No. 915.95.16-01 – New Cingular Wireless PCS, LLC / AT&T Mobility / Ryka Consulting Notice of Application.

**Application:** On February 5, 2016 the City of Selah Planning Department received a Variance application for a communication tower in the One-Family Residential (R-1) zone from New Cingular Wireless PCS, LLC / AT&T Mobility – on behalf of Ryka Consulting – Christine Contreras, 918 S. Horton St, Suite 1002, Seattle, WA 98134. The application was determined complete for processing on February 24, 2016. The decision on this application will be made within one-hundred twenty days of the determination of complete application.

**Project Description** Replace an existing 100 foot +/- high wireless communication tower with a new 101 foot tower. The facility is an existing Class 3 Use under SMC 10.02.050(C) but as a non-conforming structure (SMC 10.36.020) a variance is required for the tower to exceed the 35 foot height limitation of the R-1 zone. The new tower is to be located approximately 50 feet away from the existing tower location within the existing fenced area of the communication facility.

**Location:** On the summit of the ridge about 4,200 feet east of the east end of Lookout Point Drive in the City of Selah. (Yakima County Assessor Parcel Number: 181311-13004).

**Environmental Review:** The City of Selah, as the lead agency for this proposal under the State Environmental Policy Act (SEPA) has determined that the proposal is categorically exempt from SEPA under WAC 197-11-800(25).

**Request for Written Comments on the Proposal** Written comments concerning the proposed application will be accepted during the public comment period that ends at 5:00.p.m, on March 11, 2016. You may mail your comments to Selah Planning Department, 222 So. Rushmore Road, Selah, WA 98942, send them by fax at 1 (509) 698-7372 or by e-mail at tdurant@ci.selah.wa.us. Reference a file number stated in this notice or "New Cingular Wireless/AT&T Mobility" in your correspondence.

**Open Record Public Hearing** Notice is hereby given that on Tuesday, March 15, 2016 commencing at 5:30 P.M., or as soon thereafter as practical, the City of Selah Planning Commission will conduct an open record public hearing in the Council Chambers, Selah City Hall, 115 W. Naches Ave. Selah, WA on the Class 3 Use. All interested persons may appear and provide testimony on the application. SMC 21.09.030 and SMC 10.06.040 are pertinent to the hearing procedure. At the conclusion of the public hearing the Planning Commission will consider the matter and issue a recommendation to the City Council for approval, approval with conditions, or denial of the Variance application.

Application information including plans and maps detailing the proposal are available during regular business hours at the Planning Department at 222 South Rushmore Road, Selah, Washington 98942. The staff report will be available approximately one week before the hearing. Contact the Planning Department with project, procedural or environmental questions.

Dated this 26th day of February 2016.

/s/ Thomas R. Durant, Community Planner

(625300) February 26, 2016

EXHIBIT
tabbies
10

**Courtesy of Yakima Herald-Republic**

YAKIMA HERALD-REPUBLIC

# Affidavit of Publication

STATE OF WASHINGTON, )
)
COUNTY OF YAKIMA )

Debbie Martin, being first duly sworn on oath deposes and says that she/he is the Accounting clerk of Yakima Herald-Republic, Inc., a daily newspaper. Said newspaper is a legal newspaper approved by the Superior Court of the State of Washington for Yakima County under an order made and entered on the 13th day of February, 1968, and it is now and has been for more than six months prior to the date of publication hereinafter referred to, published in the English language continually as a daily newspaper in Yakima, Yakima County, Washington. Said newspaper is now and has been during all of said time printed in an office maintained at the aforesaid place of publication of said newspaper.

That the annexed is a true copy of a:
NOTICE OF DEVELOPMENT APPLICATION OP

it was published in regular issues (and not in supplement form) of said newspaper once each day and for a period of 1 times, the first insertion being on 02/26/2016 and the last insertion being on 02/26/2016

Yakima Herald-Republic 02/26/16

and the such newspaper was regularly distributed to its subscribers during all of the said period. That the full amount of the fee charged for the foregoing publication is the sum of $244.20

Debbie Martin

Accounting Clerk

LISA M DRIPPS NOTARY My Comm. Expires 04/05/2017 PUBLIC STATE OF WASHINGTON

Sworn to before me this 26th day of February 2016

Lisa M. Dripps

Notary Public in and for the
State of Washington,
residing at Yakima

EXHIBIT
11

# CITY OF SELAH
# AFFIDAVIT OF MAILING

**STATE OF WASHINGTON**
**COUNTY OF YAKIMA**

I, Caprise Groo, being first duly sworn on oath dispose and says:

I am an employee of the City of Selah, 222 South Rushmore Road, Selah, Washington; that I did on the 26 day of Feb, 2016 caused to be mailed, 8 envelopes, containing a true and correct copy of a Notice of Variance Application File 915.95.16-01. Said envelopes mailed from Selah, WA. with the correct first class postage and addressed to the owners of property listed by the Yakima County Treasurer as being the legal owners of real property located within 600 feet of the proposal.

A listing of the interested parties to whom notice has been mailed is contained in file 915.95.16-01.

Caprise Groo

Caprise Groo

**STATE OF WASHINGTON**
**COUNTY OF YAKIMA**

On this day personally appeared before me Caprise Groo to me known to be the individual referenced herein and who caused to be mailed the Notice of Variance Application File 915.95.16-01.

Given under my hand and official seal this 26th day of February, 2016.

Cynthia L Graziano

Cynthia L Graziano

Notary Public in and for the State of Washington, residing at Yakima, WA. My term expires 7/14/18.

CYNTHIA L GRAZIANO
COMMISSION EXPIRES
NOTARY PUBLIC
07-14-18
STATE OF WASHINGTON

EXHIBIT
12

# CITY OF SELAH

## ADMINISTRATIVE ADJUSTMENT APPLICATION

Assigned File No. _____

MAR 29 2016
CITY OF SELAH
PUBLIC WORKS

APPLICATION REQUIREMENTS (print or type information)

Date Submitted/Received By: _____

☑ Non-Refundable Application Fee

☑ Site Plan (one copy, B&W, drawn to scale, max. size 11" x17")

**THE APPLICATION AND REQUIRED SUBMITTALS MUST BE COMPLETED AND SUBMITTED BEFORE THE APPLICATION IS ACCEPTED AS COMPLETE BY THE CITY.**

APPLICANT'S NAME: New Cingular Wireless PCS LLC (AT&T Mobility)
Contact: Jennifer Taylor with Ryka Consulting

APPLICANT'S ADDRESS: c/o Ryka Consulting

918 S Horton St #1002 Seattle, WA 98134

Signature

TELEPHONE: (work) 206-228-2127 (home) _____

NAME OF LEGAL PROPERTY OWNER: ELL TEL Wireless
(If different from applicant)

ADDRESS: _____

See lease previously submitted
Signature

TELEPHONE: (work) _____ (home) _____

Tax Parcel # 181311-13004 Legal description of property: _____

See Sheet A-1 of Site Plan

(attach if lengthly)

EXHIBIT 13

Zoning Classification: R-1 Comprehensive plan designation: Low Density Residential

**NOTICE OF DEVELOPMENT APPLICATION (REVISED)**
**OPPORTUNITY TO PROVIDE COMMENTS**
**NOTICE OF CONTINUED PLANNING COMMISSION OPEN RECORD PUBLIC HEARING**

File No. 915.95.16-01 – New Cingular Wireless PCS, LLC / AT&T Mobility / Ryka Consulting Notice of Application.

**Application:** On February 5, 2016 the City of Selah Planning Department received a Variance application for a communication tower in the One-Family Residential (R-1) zone from New Cingular Wireless PCS, LLC / AT&T Mobility – on behalf of Ryka Consulting – Christine Contreras, 918 S. Horton St, Suite 1002, Seattle, WA 98134. The application was determined complete for processing on February 24, 2016. The decision on this application will be made within one-hundred twenty days of the determination of complete application.

**Application Revision:** On March 29, 2016 the applicant revised the application to include a request for administrative adjustment of the 20-foot rear setback standard of the R-1 zone. The tower is proposed to be located 9 1/2 feet and 14 1/2 feet from the south and east property lines respectively.

**Project Description** Replace an existing 100 foot +/- high wireless communication tower with a new 101 foot tower. The facility is an existing Class 3 Use under SMC 10.02.050(C) but as a nonconforming structure (SMC 10.36.020) a variance is required for the tower to exceed the 35 foot height limitation of the R-1 zone. The new tower is to be located approximately 50 feet away from the existing tower location within the existing fenced area of the communication facility.

**Location:** On the summit of the ridge about 4,200 feet east of the east end of Lookout Point Drive in the City of Selah. (Yakima County Assessor Parcel Number: 181311-13004).

**Environmental Review:** The City of Selah, as the lead agency for this proposal under the State Environmental Policy Act (SEPA) has determined that the proposal is categorically exempt from SEPA under WAC 197-11-800(25).

**Request for Written Comments on the Proposal** Written comments concerning the proposed application will be accepted during the public comment period that ends at 5:00.p.m, on May 6, 2016. You may mail your comments to Selah Planning Department, 222 So. Rushmore Road, Selah, WA 98942, send them by fax at 1 (509) 698-7372 or by e-mail at hbedi@ci.selah.wa.us. Reference a file number stated in this notice or "New Cingular Wireless/AT&T Mobility" in your correspondence.

**Open Record Public Hearing** Notice is hereby given that on Tuesday, May 17, 2016 commencing at 5:30 P.M., or as soon thereafter as practical, the City of Selah Planning Commission will conduct an open record public hearing in the Council Chambers, Selah City Hall, 115 W. Naches Ave. Selah, WA on the proposed variance and administrative adjustment. All interested persons may appear and provide testimony on the application. SMC 21.09.030 is pertinent to the hearing procedure. At the conclusion of the public hearing the Planning Commission will consider the matter and issue a decision for approval, approval with conditions, or denial of the variance and administrative adjustment applications.

Application information including plans and maps detailing the proposal are available during regular business hours at the Planning Department at 222 South Rushmore Road, Selah, Washington 98942. The staff report will be available approximately one week before the hearing. Contact the Planning Department with project, procedural or environmental questions.

Dated this 11th day of April 2016.

/s/ Harmit Bedi, City Planner

(636987) April 11, 2016

EXHIBIT
14

Courtesy of Yakima Herald-Republic

# CITY OF SELAH
# AFFIDAVIT OF MAILING

**STATE OF WASHINGTON**
**COUNTY OF YAKIMA**

I, Caprise Groo, being first duly sworn on oath dispose and says:

I am an employee of the City of Selah, 222 South Rushmore Road, Selah, Washington; that I did on the 11th day of April, 2016 caused to be mailed, 8 envelopes, containing a true and correct copy of a Notice of Variance Application File 915.95.16-01. Said envelopes mailed from Selah, WA. with the correct first class postage and addressed to the owners of property listed by the Yakima County Treasurer as being the legal owners of real property located within 600 feet of the proposal.

A listing of the interested parties to whom notice has been mailed is contained in file 915.95.16-01.

Caprise Groo

Caprise Groo

**STATE OF WASHINGTON**
**COUNTY OF YAKIMA**

On this day personally appeared before me Caprise Groo to me known to be the individual referenced herein and who caused to be mailed the Notice of Variance Application File 915.95.16-01.

Given under my hand and official seal this 11th day of April, 2016.

Cynthia L. Graziano

Cynthia L Graziano

Notary Public in and for the State of Washington, residing at Yakima, WA. My term expires 7/14/18.

CYNTHIA L GRAZIANO
COMMISSION EXPIRES
NOTARY PUBLIC
07-14-18
STATE OF WASHINGTON

EXHIBIT
15