City of Selah
Planning Commission Minutes
Of
May 17, 2016

Selah Council Chambers
115 W. Naches Ave.
Selah, Washington 98942

A. Call to Order

The meeting was called to order by Chairman Quinnell at 5:33 p.m.

B. Roll Call

Members Present:	Commissioners: Torkelson, Smith, and Quinnell.
Members Absent:	Commissioner Miller and Pendleton
Staff Present:	Harmit Bedi, City Planner, Caprise Groo, Secretary
Guest:	

C. Agenda Changes : None

D. Communications

1. Oral- None
2. Written- None

E. Approval of Minutes
1. March 15, 2016

Commissioner Smith made a motion to approve the minutes.

Commissioner Torkelson seconded the motion.

Chairman Quinnell had a motion and a second to approve the minutes. He called for a voice vote and the minutes were approves with a vote of 3-0.

F. Public Hearings

1. Old Business – None

2. New Business – File No. 915.95.16-01- New Cingular wireless PCS, LLC/AT&T Mobility/Ryka Consulting Notice of Application

   i. Variance to allow the replacement of an existing 110'± communication tower with a new 101 foot tower, and
   ii. Adjustment to allow the reduction of 20 foot rear set back standard.

Chairman Quinnell turned the floor over to Mr. Bedi, The City Planner.

Mr. Bedi corrected a typo in the paper work. He stated the Tele-Communication Tower is 100 foot. He stated that the item was a replacement of an existing tower with a new tower. He stated that the reason for the variance is the height of the tower and set back issues. Mr. Bedi presented the issue in a slide presentation. (Attached) (Staff report and exhibits attached) Mr. Bedi stated that Staff recommended approval with additional conditions (letter attached) Mr. Bedi asked if the Commission had any questions.

Chairman Quinnell asked the Proponent to speak.

Ms. Jennifer Taylor stated she was the representative for AT & T. She pointed out that the current Tele-Communication Tower was red and white and did not have a light.

Mr. Bedi discussed FAA/FCC regulation on color and Staff discretion of color.

Commissioner Smith asked if the white paint was reflective.

Ms. Taylor stated that it was not reflective.

Discussion ensued about color and coverage capacity.

Ms. Taylor had a question about condition 11.

Mr. Bedi answered the question about plan submissions.

Chairman Quinnell asked if anyone was against the Tele-Communication Tower Application. He stated for the record that no one was against it. He asked for public comment-none. He asked for discussion-none. He asked for a motion.

Commissioner Torkelson motioned to accept Tele-Communication Tower Application with all conditions including paint choice.

Commissioner Smith seconded the motion.

Chairman Quinnell called for a voice vote and the Tele-Communication Tower Application passed with a vote of 3-0.

G. General Business

1. Old Business – None
2. New Business- None

H. Reports/Announcements

1. Chairman- None
2. Commissioners- None
3. Staff-

Mr. Bedi stated he got an email and there should be two chapters presented by YCOG next month.

I. Adjournment

Commissioner Smith motioned to adjourn the meeting, Commissioner Torkelson seconded the motion. Chairman Quinnell adjourned the meeting at 5:57 pm with a voice vote of 3-0.

Chairman

City of Selah
PLANNING COMMISSION

Telecommunication Tower
File: 915.95.16-01

CITY OF SELAH
Harmit Bedi
DEPARTMENT OF PLANNING
May 17, 2016

- **Applicant:**

  New Singular Wireless PCS,LLC/AT&T/
  RYKA Consulting
  918 S. Horton Street, Suite 1002
  Seattle, Washington

- Property Owner:

  Elltell Wireless, Inc.
  Facility owned by the City of Yakima
  Subleased to Cingular and AT&T

- **Applications for:**

  i. Variance to allow the replacement of an existing 100'± communication tower with a new 101 foot tower.

  ii. Administrative Adjustment for reduction of rear set back from required 20 ' to 14½ feet from east property line and 9½ from south property line.

- Location:

  On the summit of the ridge about 4,200 feet east of Lookout Point Road

  Tax Parcel: 181311-13004

  (2.3 miles southeast Crusher Canyon Road)

Zoning: R-1 (Residential, Single – Family)

Location

Location

Aerial View

Distant View

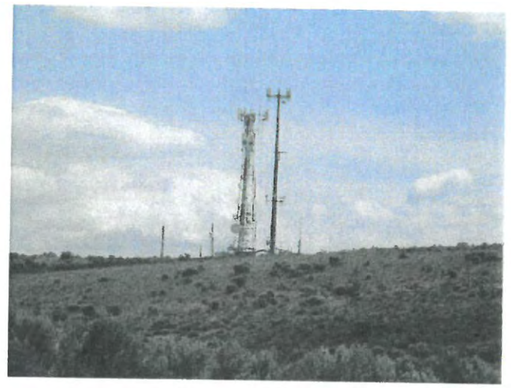

Very Distant View

View to Selah

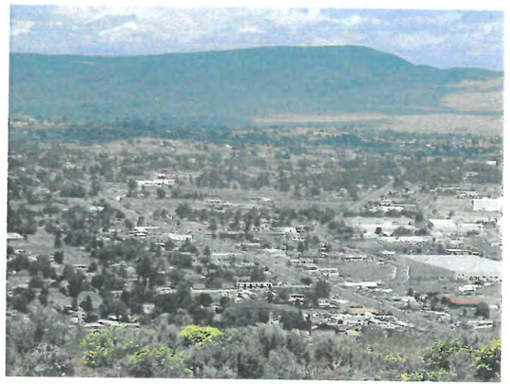

View to Yakima

Existing Location at Site

Close Up Location

Relocation Site

Close Up Location

View with Fence

Various Elements

- Land Uses Surrounding Area
- Environmental Review
- Critical Area
  - Geological Hazardous
  - Fish and Wildlife Conservation Area
    - Comprehensive Plan – Future – Low Density Resi
  - Public Interest

Staff Recommendation

- **Approval with Conditions.**

City of Selah

PLANNING DEPARTMENT

Cingular Wireless PCS, LLC / AT&T Mobility / Ryka Consulting

915.95.16.01 Variance and Adjustment

List of Exhibits

1. May 17, Staff Report for Variance (1)
2. May 17, Staff Report for Adjustment (1A)
3. Application for Variance (2)
4. Site Plan and Elevations as modified March 25, 2016 (3)
5. Emails between staff and applicant concerning application & tower location (4)
6. Surveys of project site (5)
7. Priority Habitat and Species Report (6)
8. Subject Property Map (6A)
9. Emails correspondence with Washington Department of Fish and Wildlife (7)
10. Subject Property map(8)
11. Aerial Photograph of the Site (9)
12. Notice of Application (10)
13. Affidavit of Publication (11)
14. Affidavit of Mailing (12)

Administrative Adjustment

15. Application for Administrative Adjustment (13)
16. Notice of Application (14)
17. Affidavit of Mailing (15)

CITY OF SELAH PLANNING COMMISSION
STAFF REPORT
May 17, 2016

FILE NO.: ZONING VARIANCE 915.95.16-01

PROPOSAL: Variance to allow the replacement of an existing 100'+/- communication tower with a new 101 foot tower. As an existing Class 3 use, the tower may be re-established as it previously existed if damaged or destroyed (SMC 10.02.050(c)). The tower is being relocated approximately 50 feet within the fenced and improved part of the site in order to minimize service interruptions during reconstruction. Since this is typical for this type of land use, it is being considered to be consistent with the requirement of being re-established as it existed previously. As a non-conforming structure, the tower must be brought into conformance with current development standards (SMC 10.36.040(a)). A variance is being required for the reconstructed tower to exceed the 35 foot height limit of the One Family Residential (R-1) zoning district.

PROPONENT: Cingular Wireless PCS, LLC, AT&T Mobility, Ryka Consulting

PROPERTY OWNER: Elltell Wireless, Inc. The communication facility is owned by the City of Yakima under a lease with the property owner. The City (Yakima) is subleasing the tower to applicants Cingular and AT&T.

LOCATION: On the summit of the ridge about 4,200 feet east of Lookout Point Road. (Tax Parcel Number: 181311-13004).

APPLICATION AUTHORITY AND JURISDICTION: Selah Municipal Code, Chapter 10.30.030 (Variances). SMC 10.02 and 10.06 as they pertain to Class 3 Uses. Communication towers are defined in Appendix A to Chapters 10.02 through 10.48 as "a structure upon which can be mounted a pole, mast, whip, antenna, or any combination thereof used for radio, television, cellular or microwave telecommunications, broadcast transmission or line-of-sight relay".

Communication Towers are listed as a Class 3 use in all zoning districts by Table 10.28A-11 and are subject to the standards and requirements of SMC 10.28.040(h). As an existing Class 3 use, the communication tower may be allowed to continue even though it has not been through the review procedures of the zoning ordinance and may not fully comply with the standards. It may be reestablished as it previously existed if damaged or destroyed.

As a nonconforming structure (SMC 10.36.020), a variance is required in order for the tower to exceed the 35 foot height limitation of the R-1 zone (SMC 10.36.020(a)).

PUBLIC FACILITIES AND UTILITY SERVICES: The only utilities serving the site are electrical power and telephone.

EXHIBIT
tabbies
1

ACCESS: Access to the site is by an access easement improved with a dirt road that extends east from the end of Lookout Point Road and provides access to other communication towers in the vicinity. The application does not document a right of legal access. However, based on staff experience with another communication tower using this access road and the fact that the communication facility is existing, legal access to the site is presumed.

LAND USE, ZONING& PHYSICAL CHARACTERISTICS OF THE SITE: The siteis located at the summit ridge of Lookout Point and overlooks the City of Selah and the City of Yakima. It is a fenced 3,750 square foot area improved with the existing communication tower and associated structures. The site and all surrounding properties are zoned One-Family Residential (R-1) and designated Low Density Residential by the Future Land Use Map of the Comprehensive Plan.

Most of the surrounding land use is vacant land. There are two existing communication towers in the vicinity ranging from 150 to approximately 3,000 feet away from the site, and a third approved 35 foot high tower, 800 feet away from the site. The nearest residential areas are located on Lookout Point Road about 4,200 feet west of the site and in the vicinity of South 7th Street and Harris Avenue about the same distanceto the north. Other nearby structures and land uses include a City water reservoir about 4,000 feet west of the site and above-ground electric transmission lines.Steep slopes descend both to the north and to the south. The Naches River is at the bottom of the slope to the south and along with U.S. Highway 12 forms a physical boundary separating the Cities of Selah and Yakima.

ENVIRONMENTAL REVIEW: The project is categorically exempt from SEPA under WAC 197-11-800(25)(a) which exempts the replacement of existing equipment on existing or replacement towers that does not substantially change their physical dimensions. Under WAC 197-11-800(25)(b)(v), the proposal does not "substantially change the physical dimensions" because it does not increase the height of the tower by more than ten percent or 20 feet and equipment mounted on the tower does not protrude from the edge of the structure by more than 20 feet at the level of the appurtenance.

CRITICAL AREAS: The project site was evaluated for potentially being in two critical areas based on its location. Geologically hazardous areas include several categories, the most likely being "erosion hazard areas", which are areas that have three characteristics: A slope of 15% or greater, soils identified by the NRCS as unstable witha high potential for erosion; and areas that are exposed to the erosion effects of wind or water (SMC 11.50.150(a)(2)(A)). Slope on the site is less than 15%. The NRCS soil classification of the site is Starbuck-Rock outcrop complex which is not identified by the Soil Survey for Yakima County as being either unstable or having a high erosion potential. Mapping of erosion hazard areas maintained by Yakima County also does not show this site being in an effected area. There is no evidence that the site has any of the characteristics of the other geological hazardous areas identified in the critical areas ordinance.

The second potential critical area is Fish and Wildlife Conservation Areas (SMC 11.50.120) which is described as the areas identified by the Washington Department of Fish and Wildlife under the Priority Habitat and Species Program (SMC 11.50.120(a)). The first of two classifications for these areas is "Critical" meaning an area that state or federal endangered, threatened and sensitive species has a

primary association, including anadromous fish species and habitats requiring special consideration under RCW 36.70A.172(1). The second classification: "awareness" includes all other priority habitats and species identified by WDFW.

Mapping obtained from the WDFW website shows the site location very near but outside of the designated Shrub-Steppe Habitat Area. The Washington Department of Fish and Wildlife was consulted and states that the area is somewhat isolated from other shrub-steppe habitat areas and bordered by other development, so the project is not expected to have additional cumulative impact, especially since locating near existing towers. Recommendations are to place towers as close to existing towers as possible to reduce impacts to wildlife and minimize fire risk. Also revegetation of disturbed soils using native plant species to reduce the spread of noxious invasive weeds and fire safety practices to ensure that construction and maintenance of the tower does not lead to increased fire risk.

DEVELOPMENT STANDARDS: As an existing Class 3 use, the proposed structure may be replaced as it existed previously. As a structure that is non-conforming only because it does not meet current building area, height, setback or other development standards may be continued, remodeled or enlarged provided that any enlargement meets the current development standards (SMC 10.36.040). A lawfully established structure that is destroyed is required to meet applicable building area, height, setback and other development standards when restored, unless an administrative adjustment or variance is granted (SMC 10.36.020(a)). The structure is not being enlarged, so conformance to current development standards may not be required under SMC 10.36.040. But since the tower is being replaced, it may require conformance to SMC 10.36.020(a), so it was determined a variance should be required to exceed the 35 foot height limitation.

The tower also does not meet all of the principal structure setbacks (criterion #5), which in this case are 20 feet from the front and rear lot lines and 5 feet from the side lot lines (SMC 10.08.090, Table 8-3). The tower (as measured from the nearest leg of the structure) is 14 feet from the east property line. If shifted six feet to the west, it would be 20 feet and consistent with the standard. The determination of this line as the rear property line is based on the discretion given to the building official under the definition of "Lot Line, Front" to determine the front lot line. The rear lot line is, by definition, opposite and most distant from the front. The building official's determination of the front lot line is based on owner preference and public safety issues.

The equipment building and other accessory structures meet the accessory setback standards, with the possible exception of a diesel generator that is four feet from the property line. Since none of the accessory structures are being replaced under this application, they are allowed to continue as non-conforming structures of an existing Class 3 use.

VARIANCE: The requirements for a variance are that it is not contrary to the public interest and the comprehensive plan and where literal enforcement of the zoning standards would result in undue hardship. Other requirements are that the Planning Commission has the authority to impose conditions on an approval and that a variance cannot be granted to allow a use not permitted in the underlying zoning district or to allow density exceeding that allowed by the Comprehensive Plan. Neither is the

case for this proposal as indicated by SMC 10.28.040(h)(4) which expressly provides for the consideration of a height variance for a communication tower and that as a non-residential use, the density limitations of the comprehensive plan do not apply.

Comprehensive Plan: The Future Land Use designation of the site is Low Density Residential, which under the plan provides areas of residential development up to 5 dwelling units per gross acre. Clustering of units within the permitted density range is encouraged to preserve open space, steep slopes, drainageways, etc. It accommodates agriculture until such time as it is converted to residential use. The plan neither supports nor prohibits the location of communication towers, but they have been permitted in the R-1 zone through Class 3 Review by the zoning ordinance.

The following Comprehensive Plan goals, objectives and policies are or may be relevant to this proposal:

Objective LUGM 4: Assure that land use policies and patterns adequately protect and preserve resource lands, critical areas, water supplies, water bodies and other significant areas.

Policy HSG 1.6: Replace nonconforming uses with appropriate conforming uses.

Goal: Provide appropriate protection for recognized habitat and critical areas

Policy ENV 4.3: Support regional efforts for the protection of fish and wildlife habitat consistent with science-based criteria to protect the natural values and functions of those habitats. Fish and wildlife habitat protection considerations should include: 1).The physical and hydrological connections between different habitat types to prevent isolation of those habitats; 2). Diversity of habitat types both on a local and regional scale; 3). Large tracts of fish and wildlife habitat; 4). Areas of high species diversity; 5). Locally or regionally unique or rare habitats; 6). Winter range and migratory bird habitat of seasonal importance.

Policy ENV 4.6: Protect the habitat of *Washington State Listed Species of Concern and Priority Habitats and Species* in order to maintain their populations.

Policy ENV 4.7: Cooperate with resource agencies to prioritize habitats and provide appropriate measures to protect them according to their respective values.

The proposed use is only nonconforming with respect to its height, so it should not be considered to be an inappropriate use under Policy HSG 1.6 (which as a policy from the Housing Element of the plan may not be relevant to this action). Also under the Federal Telecommunications Act, siting of the tower may be allowed even if it does not meet local land use standards if established that there is a coverage gap in service and if demonstrated that there is no less intrusive alternative. These findings could also be considered unique circumstances to support approval of the variance.

Based on comments received from the Washington Department of Fish and Wildlife and other documentation in the record, the site is located near a priority habitat area, warranting protection

under Policy ENV 4.6, but the area is already somewhat isolated and of lower value. Appropriate measures have been identified and can be provided consistent with Policies ENV 4.3 and 4.7.

The Public Interest: The purpose of the R-1 zone is to provide for single-family residential development where urban governmental services are currently available or will be extended by the proponent to facilitate development at no public cost (SMC 10.12.010). Specific intents of 10.12.010 include providing for an orderly, phased transition from vacant or partially developed to single-family development and ensuring that R-1 uses will facilitate future urban development and extension of utilities. Communication towers are permitted Class 3 uses in the R-1 zone and there is no indication that the proposed use is contrary to these purposes and intents, especially since it is replacing an existing facility.

Required Variance Criteria:

1. **That special circumstances applicable to the subject property, including size, shape, topography, location or surroundings do exist:**

   The special circumstances that are applicable to the subject property are that the existing tower location is necessary to provide coverage in the public interest including public service telecommunications for the City of Yakima and public commercial telecommunication service. Also that the existing tower is now providing these public telecommunication services; reducing tower height could hamper or eliminate its ability to provide service to all of the existing entities and force them to locate elsewhere.

2. **That because of such special circumstances, strict application of this title would deprive the subject property of rights and privileges enjoyed by other properties in the vicinity under identical zoning district classification:**

   Requiring the tower to be less than the proposed height would hamper its ability to provide the telecommunication functions that are necessary and in the public interest and which are similar to services being provided by other towers in the vicinity.

3. **That the granting of the variance will not be materially detrimental to the public welfare or injurious to the property or improvements in the vicinity and zoning district classification in which the property is situated:**

   The surrounding R-1 zoned property is mostly undeveloped and the proposed tower is the replacement of a similar tower already in existence. The only improvements in the vicinity are other communication towers and limited utilities. Granting the variance may avoid creating a coverage gap and the necessity of public telecommunication service providers having to find another location to provide telecommunication services to the public.

4. **That the special circumstances do not result from the actions of the applicant:**

The locational characteristics of this site that make it superior for this use do not result from the actions of the applicant, and other locations in the vicinity that might have equal characteristics are under the same zoning.

5. **That the variance is the minimum variance that will make possible the reasonable use of the land, building or structure:**

   The variance allows the tower to be replaced at the same elevation as the existing facility. Reducing the height of the tower would likely reduce its ability to accommodate all of the entities that are now using it or to provide for additional co-location of communication facilities.

6. **That the granting of a variance will be in harmony with the general purpose and intent of this title, the specific zoning district and the comprehensive plan:**

   The variance does not substantially impact the R-1 zoning district and the land use is an allowed class 3 use. The proposal is consistent with the comprehensive plan because the existing facility is not a nonconforming land use and reasonable measures can be taken to protect the nearby priority habitat area, which is not of significant value. This tower is currently providing for co-location of communication facilities, which is consistent with this title and which is to be given preferential consideration where there is no height increase (SMC 10.28.040(h)(3)).

7. **That the administrative adjustment or administrative modification provisions of this chapter were either not applicable or were insufficient to provide the relief sought from the standards of this title:**

   These provisions were not applicable due to the following zoning ordinance provisions:

   a. Administrative adjustment may not be used to increase height standards (SMC 10.30.020(d)(2)).

   b. A variance is required to allow the increase in height of a communication tower beyond the standard of the underlying zoning district (SMC 10.28.040(h)(4)).

RECOMMENDATION: Approval subject to the following conditions.

1. Height limitation of 101 feet as shown by the application and substantial conformance to the site plan and elevations submitted with the application except as modified by this decision.

2. Consistent with the zoning ordinance requirements for camouflaging the tower, the tower shall not be painted red, white, or any other bright color but shall be painted gray, green or other darker color that blends with the surroundings. No lights shall be installed on the tower unless

the administrative official is provided with written documentation from the FAA, FCC or a State agency with jurisdiction over aviation that states specifically that such lighting is required on this tower.

3. Making the tower available for co-location of telecommunication facilities consistent with SMC 10.28.040(h)(3) is authorized and encouraged and the City shall not require additional zoning review for the addition of such facilities provided that they do not increase the height of the tower at the time of their installation.

4. Tower width shall not be increased beyond that shown in the site plan and elevations submitted with the application in order to reduce visual impact as required by the zoning ordinance.

5. Security lighting fixtures shall be shielded, directed or located to not shine on neighboring properties or to be visible from a distance.

6. New equipment buildings or other ground level appurtenances may be installed subject to compliance with the building code and subject to the following conditions:

    a. Conformance to zoning setbacks for accessory buildings.

    b. Painted or siding installed that is gray, green or other darker color that blends with the surroundings.

    c. They shall be located in the existing fenced area on the site as shown by the site plan.

7. Submittal of a pre-construction drainage plan and sediment control plan prior to building permit issuance. Special inspections for concrete and rebar will be required.

8. Soils disturbed during the project shall be revegetated using native plant species to reduce the spread of noxious invasive weeds.

9. Project shall be completed within one year of the final decision approving the variance. Completion includes the removal of the existing tower, which may occur after construction of the new tower has begun. Extensions may be requested as authorized by the zoning ordinance, but must be requested in writing prior to the completion date.

CITY OF SELAH PLANNING COMMISSION
SUPPLEMENTAL STAFF REPORT
May 17, 2016

FILE NO.: ZONING VARIANCE 915.95.16-01; ADMINISTRATIVE ADJUSTMENT...

PROPONENT: Cingular Wireless PCS, LLC, AT&T Mobility, Ryka Consulting

AMENDED PROPOSAL: In addition to the height variance being proposed, the application has been amended to include an administrative adjustment to allow the reduction of the 20 foot rear setback standard of the One Family Residential (R-1) zoning district. The tower (as measured from the nearest leg of the structure) is 14½ feet from the east property line and 9½ feet from the south property line. Regardless of which lot line is considered to be the rear, the 20 foot principal structural setback, a specific requirement for communication towers under SMC 10.28.040(h)(5), must be adjusted. The side setback standard is being met, regardless of which lot line it is considered to be measured from.

The reasons given by the applicant for the administrative adjustment include the small size of the parcel; the placement of other structures within the fenced project site; that the small parcel on which they are located was previously approved for this use and that adjacent properties also have telecommunication uses. The applicant states that the reduced setback would not significantly affect adjacent properties.

The size of the subject parcel is 75 feet by 50 feet (3,750 square feet) providing limited room to place the structures, which other than the tower, are not being substantially relocated or reconfigured. Based on records obtained from the Yakima County Assessor dating to 1987, the parcel was created by an exempt division, probably under RCW 58.17.040(8), for the purpose of leasing land for personal wireless services facilities, although staff has not determined this for certain. The owner of record of the subject property is Elltell Wireless, Inc. while the larger parcel from which it was segregated is shown by County records to be owned by Ellensburg Telephone Co., Inc. County records show the mailing addresses for these two entities to be the same. This is consistent with the creation of the small parcel for lease and suggests that both parcels are effectively part of a larger single property, being used for telecommunications (there is another communication tower on the larger parcel).

DETERMINATION OF SIDE AND REAR LOT LINES: The determination of which lot line is the rear property line, and which is the side is based on the definition of "Lot Line, Front" from Appendix A to Chapters 10.02 through 10.48. This definition states that generally the front lot line is the property line separating the lot from a street. "Street" in turn is defined by the Zoning Ordinance to mean a public or private right-of-way affording principal means of access to abutting property. The rear lot line is, by definition, opposite and most distant from the front. When there is uncertainty as to which lot line is the front, the determination is made by the Building Official based on owner preference and public safety issues.

EXHIBIT
tabbies
1A

In this relatively remote, undeveloped location, there does not seem to be any public safety factors that would dictate the preference to one lot line over the other. Nor has the applicant (or owner) indicated a preference. The property is served by a private road along its north line, indicating that it is the front lot line according to the zoning ordinance definition. The south line would be the rear lot line and the other two lot lines would be sides. Based on this determination, the setback adjustment would be 10½ feet allowing for a 9½ foot setback from the south lot line. At 14½ feet from the east property line, the side setback standard is being met.

ADMINISTRATIVE ADJUSTMENT: Some development standards may be administratively adjusted to accommodate the purpose and intent of the zoning district involved and flexibility of development (SMC 10.02.050(b)(2)). The standard may be adjusted or modified if the administrative official (the Planning Commission in this case) finds that it is consistent with the criteria of SMC 10.30.020(b)(1) through (5), that it is not one of the standards that cannot be adjusted under SMC 10.30.020(a) or (d) and that there are no other specific procedures and criteria provided for elsewhere in Title 10 to reduce or modify the standard (SMC 10.30.020(e)). Adjustment of the setback standard as proposed is not precluded under any of these provisions.

Required Administrative Adjustment Criteria – The adjustment is consistent with:

1. **The intent and purposes of the specific zoning district and the particular standard being adjusted.**

   There are no substantial impacts on the R-1 zoning district as a result of reducing the setback. The response to Variance Criterion #6 from the staff report is incorporated by reference to support this statement. The impact on the property adjoining the rear lot line is minimal because of its existing ownership, use, relatively remote location and the otherwise undeveloped nature of this and other surrounding properties.

   There is no intent statement given for setback standards, although they are usually required to provide privacy, light, air, emergency access, and in the case of front setbacks and setbacks that border streets, to provide separation from the street and to accommodate off-street parking. None of these factors are being compromised due to the remoteness of the site, lack of residential development, ownership and land use of the property adjacent to the rear lot line.

2. **Balancing the flexibility of the adjustment with the health, safety and general welfare of individual neighborhoods and the community.**

   The nearest individual neighborhoods are ¾ of a mile or more away from the site, far enough to not be meaningfully affected by a setback reduction for the tower. Any effect would be on future development permitted in the R-1 zone. Since the property bordering the site on the south is owned by and used for telecommunications, this effect would be limited to other surrounding properties which are all farther from proposed tower placement than required by setback standards.

3. **Coordinating development with adjacent land uses and the physical features of the site.**
   The proposed tower is being relocated on the site, rather than being replaced in its current location in order to reduce the interruption of service for telecommunication service providers. Due to the small size of the site, there is limited available space and it must avoid other facilities on-site that are not being relocated. The only adjacent land uses are other communication towers which would not be impacted by the proposed reconstruction.

4. **Maintaining the minimum adjustment necessary to accommodate the proposed use.**

   According to the applicant, the proposed location as shown on the site plan is necessary due to the small size of the site and the location and configuration of other existing improvements.

5. **The adjustment is of distinct and direct benefit to the adjoining property owners and the community at large.**

   The tower provides necessary telecommunications service to the community at large including service by public agencies. The tower could be sited under the Federal Telecommunications Act if shown that its denial would result in a gap in coverage. The tower provides for co-location of communication facilities, which is consistent with Title 10 and which is to be given preferential treatment where there is no height increase (SMC 10.28.040(h)(3)).

CITY OF SELAH

VARIANCE APPLICATION

Assigned File No. 915.95.16-01

APPLICATION REQUIREMENTS (print or type information)

Date Submitted/Received By: fee paid 2/5/16

☒ Non-Refundable Application Fee See SMC Title 20, Chapter 20.04.

☒ Site Plan (one copy, B&W, drawn to scale, maximum size 11" x17")

THE APPLICATION AND REQUIRED SUBMITTALS MUST BE COMPLETED AND SUBMITTED BEFORE THE APPLICATION IS ACCEPTED AS COMPLETE BY THE CITY.

APPLICANT'S NAME: New Cingular Wireless PCS, LLC / AT&T Mobility - on behalf of Ryka Consulting - Christine Contreras

APPLICANT'S ADDRESS: 918 S Horton St, Suite 1002 Seattle, WA 98134

Signature

TELEPHONE: (work) 206-523-1941 (home) N/A

NAME OF LEGAL PROPERTY OWNER: 3004 -ELLTEL Wireless 3005-Schwerdtfeger Revocable Living Trust
(If different from applicant)

ADDRESS:

N/A Ground lease provided. Tower owned by City of Yakima - City to retain ownership.

Signature

TELEPHONE: (work) (home)

Tax Parcel # 181311-13004 / 3005 Legal description of property:

* See Site Plan for full legal description

(attach if lengthy)

Zoning Classification: Class 3 - R-1 Comprehensive plan designa

EXHIBIT 2

at&t
Your world. Delivered.

MasTec

SELAH

2.3 MILES SOUTHEAST CRUSHER CANYON
SELAH, WA 98942
YAKIMA COUNTY

YA01

FA: 10098221 △2

NOTE:
PER RFDS REV 3.0 DATED 03-27-15

VICINITY MAP

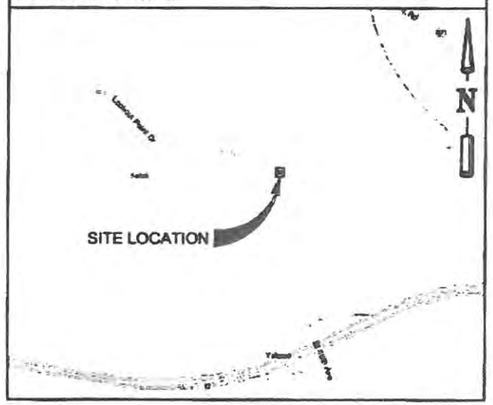

GENERAL LOCATION MAP

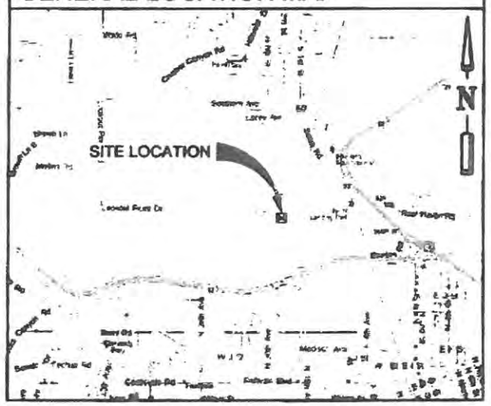

APPROVAL/SIGN OFF OF DRAWINGS

CONSULTANT	DATE	SIGNATURE
PROJECT MANAGER		
CONSTRUCTION MANAGER		
SITE ACQUISITION		
LANDLORD'S REPRESENTATIVE		

CARRIER	DATE	SIGNATURE
PROJECT MANAGER		
CONSTRUCTION MANAGER		
RF ENGINEER		
INTERCONNECT		
OPERATIONS		
COMPLIANCE		

REVIEWERS SHALL CLEARLY PLACE INITIALS ADJACENT TO EACH REDLINE NOTE AS DRAWINGS ARE BEING REDLINED

DRIVING DIRECTIONS

FROM NEW CINGULAR WIRELESS IN REDMOND, WA:
HEAD EAST ON NE 72nd WAY, GO 144 FT.
TURN RIGHT ONTO 164th AVE NE, GO 203 FT.
TURN RIGHT ONTO BEAR CREEK PKWY, GO 0.3 MI.
TURN LEFT ONTO LEARY WAY NE, GO 0.3 MI.
TURN SLIGHTLY LEFT TO MERGE ONTO WA-520 W, GO 0.4 MI.
MERGE ONTO WA-520 W, GO 4.6 MI.
TAKE I-405 S EXIT TOWARD RENTON, GO 0.2 MI.
MERGE ONTO I-405 S, GO 3.2 MI.
TAKE EXIT #11 TO MERGE ONTO I-90 E TOWARD SPOKANE, GO 101 MI.
TAKE EXIT #110 FOR I-82 E/US-97 S TOWARD YAKIMA, GO 1.1 MI.
CONTINUE ONTO I-82 E/US-97 S, GO 25.5 MI.
TAKE EXIT #26 FOR WA-821 N TOWARD SELAH, GO 0.3 MI.
TURN RIGHT ONTO WA-821 N, GO 0.2 MI.
TURN LEFT ONTO WA-823 S, GO 3.2 MI.
TURN RIGHT ONTO E NACHES AVE, GO 0.4 MI.
CONTINUE ONTO CRUSHER CANYON RD, GO 1.5 MI.
TURN LEFT ONTO LOOKOUT POINT RD, GO 0.8 MI.
TURN LEFT ONTO LOOKOUT POINT DR (GATE ACCESS REQ'D), GO 1.5 MI.
ARRIVE AT THE SITE ON THE RIGHT

LEGAL DESCRIPTION

SEE SHEET A-1 FOR LEGAL DESCRIPTION

PROJECT TEAM

APPLICANT:
NEW CINGULAR WIRELESS, LLC.
16221 NE 72nd WAY, RTC 3
P.O. BOX 97061
REDMOND, WA 98052

PROJECT ENGINEER: △1
CORNERSTONE ENGINEERING, INC.
16928 WOODINVILLE-REDMOND RD N.E. STE 210
WOODINVILLE, WA 98072
MARK W OLSON, P.E.
(425) 487-1732

PROJECT CONSULTANT:
MASTEC
1203 114TH AVE SE
BELLEVUE, WA 98004
(425) 214-7000

PROPERTY OWNER (PARCEL 3004)
ELLTEL WIRELESS INC
TBD

PROPERTY OWNER (PARCEL 3005)
SCHWERDTFEGER REVOCABLE LIVING TRUST
TBD

TOWER OWNER:
CITY OF YAKIMA
129 N 2ND ST
YAKIMA, WA 98901
(509) 575-6048 △2

PROJECT LEAD:
DANIEL KELLY
(425) 214-9749
daniel.kelly@mastec.com

CONSTRUCTION MANAGER:
RON EVENSON
(206) 550-9322
revenson@mastec.com

SITE ACQUISITION / ZONING: △1
CHRISTINE CONTRERAS
(206) 523-1941
ccontreras@rykaconsulting.com

PERMITTING:
CHRISTINE CONTRERAS
(206) 523-1941
ccontreras@rykaconsulting.com

RF ENGINEER:
KEN MOTT
(206) 829-0075
kmott@mastec.com

PROJECT INFORMATION

CODE INFORMATION: △1
ZONING CLASSIFICATION: R1
BUILDING CODE: IBC 2012
CONSTRUCTION TYPE: V-B
OCCUPANCY: GROUP U
JURISDICTION: CITY OF SELAH
PROPOSED BUILDING USE: TELECOMM

SITE LOCATION (BASED ON NAD 83):
LATITUDE: 46° 37' 49.74" N (46.630484)
LONGITUDE: 120° 32' 05.75" W (-120.534932)
TOP OF STRUCTURE: 101.0' (TOWER & FOUNDATION)
BASE OF STRUCTURE: ±1,769.0' AMSL

GENERAL INFORMATION:
1. PARKING REQUIREMENTS ARE UNCHANGED. (NON ASSIGNED TECH PARKING)
2. TRAFFIC IS UNAFFECTED.

△4 **PARCEL NUMBER:**
18131113004

AREA OF PARCEL:
±3,750 SQ. FT. (±0.08 ACRES)

PROJECT AREA:
±185 SQ. FT. (EQUIPMENT AREA)

NEW IMPERVIOUS AREA:
0 SQ. FT.

DRAWING INDEX

DWG	DESCRIPTION
T-1	TITLE SHEET
G-1	GENERAL NOTES
A-1	SITE PLAN
A-1.1	EXISTING ENLARGED SITE PLAN
A-1.2	PROPOSED ENLARGED SITE PLAN
A-1.3	EXISTING & PROPOSED SHELTER PLANS
A-2	EXISTING & PROPOSED NORTHEAST ELEVATIONS
A-3	DETAIL SHEET
A-3.1	DETAIL SHEET
A-4	CONSTRUCTION DETAILS
RF-1	ANTENNA PLANS & SCHEDULES
E-1	SCHEMATIC GROUNDING PLAN
E-1.1	GROUNDING DETAILS

BY OTHERS △2

DWG	DESCRIPTION
C1	100' EHRESHMAN SELF SUPPORT TOWER
E01	SPREAD FOOTING FOUNDATION 100' EEI SSTA
E02	FOUNDATION AND TEMPLATES

PROJECT DESCRIPTION

- REPLACE & RELOCATE (1) 100' HIGH LATTICE TOWER (BY ERSHMANN ENGINEERING INC) △1
- REPLACE & RELOCATE (9) PANEL ANTENNAS
- REPLACE & RELOCATE (6) TMA'S
- REPLACE & RELOCATE ALL ANTENNA MOUNTING HARDWARE
- REPLACE ALL COAX CABLES
- REPLACE & RELOCATE(1) ICE BRIDGE
- RELOCATE (6) REMOTE RADIO HEADS (RRH)
- RELOCATE (1) SURGE SUPPRESSION DISTRIBUTION UNIT
- RELOCATE (E) MICROWAVE ANTENNA
- ADD (3) PANEL ANTENNAS
- ADD (6) REMOTE RADIO HEADS (RRH)
- ADD (1) SURGE SUPPRESSION DISTRIBUTION UNIT
- ADD (6) DIPLEXERS
- ADD (2) POWER CABLES
- ADD (1) FIBER CABLE
- ADD (1) FIBER SLACK BOX
- ADD (1) DC12 SURGE PROTECTION UNIT
- ADD RED AND WHITE PAINT PER FAA GUIDELINES

at&t
Your world. Delivered.

PLANS PREPARED BY:

CORNERSTONE ENGINEERING, INC.
16928 WOODINVILLE-REDMOND RD NE, SUITE 210
WOODINVILLE, WA 98072
PHONE: 425.487.1732
EMAIL: cei@cornerstone-engr.com
WWW.CORNERSTONE-ENGR.COM

PROJECT INFO:
YA01
SELAH
2.3 MILES SOUTHEAST CRUSHER CANYON
SELAH, WA 98942
YAKIMA COUNTY

ISSUED FOR:
CONSTRUCTION

REV:	DATE:	ISSUED FOR:	BY:
△5	03-25-16	REVIEW COMMENTS	AJB
△4	02-29-16	PER COMMENTS	LJS
△3	02-01-16	FINAL, PER CITY COMMENTS	LJS
△2	01-18-16	FINAL, PER CLIENT REVISION	DRA

DRAWN BY:	CHK.:	APV.:
JRF	MWO	MWO

CURRENT ISSUE DATE:
03-25-16

LICENSURE:
MARK WESLEY OLSON
STATE OF WASHINGTON
32324
REGISTERED
PROFESSIONAL ENGINEER
3/25/16

JURISDICTIONAL APPROVAL:
EXHIBIT
3

PROPRIETARY INFORMATION:
DO NOT SCALE DRAWINGS. CONTRACTOR MUST VERIFY ALL DIMENSIONS AND ADVISE CONSULTANTS OF ANY ERRORS AND OMISSIONS. ALL PREVIOUS ISSUES OF THIS DRAWING ARE SUPERSEDED BY THE LATEST REVISION. THE INFORMATION CONTAINED IN THIS SET OF DOCUMENTS IS PROPRIETARY BY NATURE. ANY USE OR DISCLOSURE OTHER THAN WHICH IS RELATED TO NAMED CLIENT IS STRICTLY PROHIBITED.

DRAWING TITLE:
TITLE SHEET

DRAWING NUMBER:
T-1 5

CEI JOB NUMBER: LTE 3C/4C 14-13046

GENERAL NOTES:

1. DRAWINGS ARE NOT TO BE SCALED, WRITTEN DIMENSIONS TAKE PRECEDENCE. THIS SET OF DOCUMENTS IS INTENDED TO BE USED FOR DIAGRAMMATIC PURPOSES ONLY, UNLESS NOTED OTHERWISE. THE GENERAL CONTRACTOR'S SCOPE OF WORK SHALL INCLUDE FURNISHING ALL MATERIALS, EQUIPMENT, LABOR, AND ANY REQUIREMENTS DEEMED NECESSARY TO COMPLETE PROJECT AS DESCRIBED IN THE DRAWINGS AND OWNER'S PROJECT MANUAL.

2. PRIOR TO THE SUBMISSION OF BIDS, CONTRACTORS INVOLVED SHALL VISIT THE JOB SITE TO FAMILIARIZE THEMSELVES WITH ALL CONDITIONS AFFECTING THE PROPOSED PROJECT. CONTRACTORS SHALL VISIT THE CONSTRUCTION SITE WITH THE CONSTRUCTION/CONTRACT DOCUMENTS TO VERIFY FIELD CONDITIONS AND CONFIRM THAT THE PROJECT WILL BE ACCOMPLISHED AS SHOWN. PRIOR TO PROCEEDING WITH CONSTRUCTION, ANY ERRORS, OMISSIONS, OR DISCREPANCIES SHALL BE BROUGHT TO THE ATTENTION OF THE ARCHITECT/ENGINEER VERBALLY AND IN WRITING.

3. THE ARCHITECTS/ENGINEERS HAVE MADE EVERY EFFORT TO SET FORTH IN THE CONSTRUCTION AND CONTRACT DOCUMENTS THE COMPLETE SCOPE OF WORK. CONTRACTORS BIDDING THE JOB ARE NEVERTHELESS CAUTIONED THAT MINOR OMISSIONS OR ERRORS IN THE DRAWINGS AND OR SPECIFICATIONS SHALL NOT EXCUSE SAID CONTRACTOR FROM COMPLETING THE PROJECT AND IMPROVEMENTS IN ACCORDANCE WITH THE INTENT OF THESE DOCUMENTS. THE BIDDER SHALL BEAR THE RESPONSIBILITY OF NOTIFYING (IN WRITING) THE ARCHITECT/ENGINEER OF ANY CONFLICTS, ERRORS, OR OMISSIONS PRIOR TO SUBMISSION OF CONTRACTOR'S PROPOSAL. IN THE EVENT OF DISCREPANCIES THE CONTRACTOR SHALL PRICE THE MORE COSTLY OR EXTENSIVE WORK, UNLESS DIRECTED OTHERWISE.

4. THE CONTRACTOR SHALL SUPERVISE AND DIRECT THE PROJECT DESCRIBED IN THE CONTRACT DOCUMENTS. THE CONTRACTOR SHALL BE SOLELY RESPONSIBLE FOR ALL CONSTRUCTION MEANS, METHODS, TECHNIQUES, SEQUENCES, AND PROCEDURES FOR COORDINATING ALL PORTIONS OF THE WORK UNDER THE CONTRACT.

5. THE CONTRACTOR SHALL INSTALL ALL EQUIPMENT AND MATERIALS ACCORDING TO MANUFACTURER'S/VENDOR'S SPECIFICATIONS UNLESS NOTED OTHERWISE OR WHERE LOCAL CODES OR ORDINANCES TAKE PRECEDENCE.

6. ALL WORK PERFORMED ON THE PROJECT AND MATERIALS INSTALLED SHALL BE IN STRICT ACCORDANCE WITH ALL APPLICABLE CODES, REGULATIONS, AND ORDINANCES. CONTRACTOR SHALL GIVE ALL NOTICES AND COMPLY WITH ALL LAWS, ORDINANCES, RULES, REGULATIONS AND LAWFUL ORDERS OF ANY PUBLIC AUTHORITY, MUNICIPAL AND UTILITY COMPANY SPECIFICATIONS, AND LOCAL AND STATE JURISDICTIONAL CODES BEARING ON THE PERFORMANCE OF THE WORK.

7. GENERAL CONTRACTOR SHALL PROVIDE, AT THE PROJECT SITE, A FULL SET OF CONSTRUCTION DOCUMENTS UPDATED WITH THE LATEST REVISIONS AND ADDENDA OR CLARIFICATIONS FOR USE BY ALL PERSONNEL INVOLVED WITH THE PROJECT. THIS SET IS A VALID CONTRACT DOCUMENT ONLY IF THE TITLE SHEET IS STAMPED "FOR CONSTRUCTION" AND EACH SUCCESSIVE SHEET BEARS THE ARCHITECT'S SIGNED WET STAMP.

8. THE STRUCTURAL COMPONENTS OF ADJACENT CONSTRUCTION OR FACILITIES ARE NOT TO BE ALTERED BY THIS CONSTRUCTION PROJECT UNLESS NOTED OTHERWISE.

9. SEAL ALL PENETRATIONS THROUGH FIRE-RATED AREAS WITH U.L. LISTED OR FIRE MARSHALL APPROVED MATERIALS IF APPLICABLE TO THIS FACILITY AND OR PROJECT SITE.

10. CONTRACTOR TO PROVIDE A PORTABLE FIRE EXTINGUISHER WITH A RATING OF NOT LESS THAN 2-A OR 2-A10BC WITHIN 75 FEET TRAVEL DISTANCE TO ALL PORTIONS OF PROJECT AREA DURING CONSTRUCTION.

11. CONTRACTOR SHALL MAKE NECESSARY PROVISIONS TO PROTECT EXISTING IMPROVEMENTS, EASEMENTS, PAVING, CURBING, ETC. DURING CONSTRUCTION. UPON COMPLETION OF WORK, CONTRACTOR SHALL REPAIR ANY DAMAGE THAT MAY HAVE OCCURRED DUE TO CONSTRUCTION ON OR ABOUT THE PROPERTY.

12. CONTRACTOR SHALL KEEP GENERAL WORK AREA CLEAN AND HAZARD FREE DURING CONSTRUCTION AND DISPOSE OF ALL DIRT, DEBRIS, AND RUBBISH. CONTRACTOR SHALL REMOVE EQUIPMENT NOT SPECIFIED AS REMAINING ON THE PROPERTY OR PREMISES. SITE SHALL BE LEFT IN CLEAN CONDITION AND FREE FROM PAINT SPOTS, DUST, OR SMUDGES OF ANY NATURE.

13. THE GENERAL CONTRACTOR SHALL RECEIVE WRITTEN AUTHORIZATION TO PROCEED WITH CONSTRUCTION PRIOR TO STARTING WORK ON ANY ITEM NOT CLEARLY DEFINED BY THE CONSTRUCTION DRAWINGS/CONTRACT DOCUMENTS.

14. THE CONTRACTOR SHALL PERFORM WORK DURING OWNER'S PREFERRED HOURS TO AVOID DISTURBING NORMAL BUSINESS.

15. THE CONTRACTOR SHALL PROVIDE THE CLIENT PROPER INSURANCE CERTIFICATES NAMING CLIENT AS ADDITIONAL INSURED, AND CLIENT PROOF OF LICENSE(S) AND PE & PD INSURANCE.

16. CONTRACTOR SHALL BE RESPONSIBLE FOR SCHEDULING AND COORDINATING ALL INSPECTIONS.

17. CAUTION! CALL BEFORE YOU DIG! BURIED UTILITIES EXIST IN THE AREA AND UTILITY INFORMATION SHOWN MAY NOT BE COMPLETE. CONTACT THE ONE-CALL UTILITY LOCATE SERVICE A MINIMUM OF 48 HOURS PRIOR TO CONSTRUCTION. DIAL 811.

18. CONTRACTOR TO DOCUMENT ALL WORK PERFORMED WITH PHOTOGRAPHS AND SUBMIT TO CLIENT ALONG WITH REDLINED CONSTRUCTION SET.

19. CONTRACTOR TO DOCUMENT ALL CHANGES MADE IN THE FIELD BY MARKING UP (REDLINING) THE APPROVED CONSTRUCTION SET AND SUBMITTING THE REDLINED SET TO THE CLIENT UPON COMPLETION.

20. FOR COLLOCATION SITES: CONTACT TOWER OWNER REPRESENTATIVE FOR PARTICIPATION IN BID WALK.

21. GENERAL CONTRACTOR IS TO COORDINATE ALL POWER INSTALLATION WITH POWER COMPANY AS REQUIRED. CONTRACTOR TO REPORT POWER INSTALLATION COORDINATION SOLUTION(S) TO NETWORK CARRIER REPRESENTATIVE, PROJECT CONSTRUCTION MANAGER AND ARCHITECT.

22. ANY SUBSTITUTIONS OF MATERIALS AND/OR EQUIPMENT, MUST BE APPROVED BY CLIENT CONSTRUCTION MANAGER.

23. IN THE CASE OF ROOFTOP SOLUTIONS FOR EQUIPMENT AND/OR ANTENNA FRAMES WHERE PENETRATION OF EXISTING ROOFING MATERIALS OCCUR, THE GENERAL CONTRACTOR SHALL COORDINATE WITH BUILDING OWNER AND BUILDING ROOFING CONTRACTOR OF RECORD FOR INSTALLATION, PATCH, REPAIR OR ANY AUGMENTATION TO THE ROOF, AND HAVE THE WORK GUARANTEED UNDER THE ROOFING CONTRACTOR'S WARRANTY FOR MOISTURE PENETRATION OR AND OTHER FUTURE BREACH OF ROOFING INTEGRITY.

24. IN THE CASE OF ROOFTOP SOLUTIONS WITH THE INSTALLATION OF ANTENNAS WITHIN CONCEALED (SHROUDED) SUPPORT FRAMES OR TRIPODS, THE GENERAL CONTRACTOR SHALL COORDINATE WITH THE FRP DESIGNER/FABRICATOR TO ENSURE THAT THE FINAL FRP SHROUD IS SIMULATING (IN APPEARANCE) DESIGNATED EXISTING EXTERIOR BUILDING FACADE MATERIALS, TEXTURES, AND COLORS. THE CONTRACTOR SHALL FURTHERMORE ENSURE THE USE OF COUNTERSUNK FASTENERS IN ALL FRP CONSTRUCTION. WHEN PHOTO SIMULATIONS ARE PROVIDED, THE CONTRACTOR SHALL ENSURE THAT FINAL CONSTRUCTION REPRESENTS WHAT IS INDICATED IN PHOTO SIMULATIONS. SHOP DRAWINGS SHALL BE PROVIDED TO THE GENERAL CONTRACTOR, CONSTRUCTION COORDINATOR, AND ARCHITECT PRIOR TO FABRICATION AND CONSTRUCTION.

25. IN THE CASE OF ROOFTOP SOLUTIONS FOR EQUIPMENT AND/OR ANTENNA FRAMES WHERE ANCHORING TO A CONCRETE ROOF SLAB IS REQUIRED, CONTRACTORS SHALL CONFIRM (PRIOR TO SUBMITTING BID) WITH CONSULTING CONSTRUCTION COORDINATOR AND ARCHITECT THE PRESENCE OF POST TENSION TENDONS WITHIN THE ROOF SLAB - RESULTING FROM AN UNDOCUMENTED DESIGN CHANGE IN THE EXISTING BUILDING "AS-BUILT DRAWING SET" - HAVING INDICATED AN ORIGINAL DESIGN SOLUTION OF REINFORCED CONCRETE W/ EMBEDDED STEEL REBAR. IN THE EVENT POST TENSION SLAB SOLUTION IS PRESENT, CONTRACTOR SHALL INCLUDE PROVISIONS FOR X-RAY PROCEDURES (INCLUDED IN BID) FOR ALL PENETRATION AREAS WHERE ANCHORING OCCURS.

26. GENERAL & SUB CONTRACTORS SHALL USE STAINLESS STEEL METAL LOCKING TIES FOR ALL CABLE TRAY TIE DOWNS AND ALL OTHER GENERAL TIE DOWNS (WHERE APPLICABLE). PLASTIC ZIP TIES SHALL NOT BE PERMITTED FOR USE ON CLIENT PROJECTS. RECOMMENDED MANUFACTURE SHALL BE: PANDUIT CORP. METAL LOCKING TIES MODEL NO. MLT4S-CP UNDER SERIES-304 (OR EQUAL). PANDUIT PRODUCT DISTRIBUTED BY TRIARC OF TACOMA, WA.

DESIGN CRITERIA:

THE STRUCTURAL DESIGN OF THIS PROJECT IS IN ACCORDANCE WITH THE INTERNATIONAL BUILDING CODE 2012 WITH WASHINGTON STATE BUILDING CODE AMENDMENTS (IBC 2012)

DESIGN LOADS:
DESIGN DATA FOR CITY OF SELAH, WA

-ROOF SNOW LOAD	N/A (NOT A ROOFTOP SOLUTION)
-BASIC WIND SPEED	110 MPH (3 SEC GUST)
-WIND EXPOSURE	B

CODE COMPLIANCE:

ALL WORK AND MATERIALS SHALL BE PERFORMED AND INSTALLED IN ACCORDANCE WITH THE CURRENT EDITIONS OF THE FOLLOWING CODES AS ADOPTED BY THE LOCAL GOVERNING AUTHORITIES NOTHING IN THESE PLANS IS TO BE CONSTRUCTED TO PERMIT WORK NOT CONFORMING TO THESE CODES.

BUILDING/DWELLING CODE	IBC 2012 (STATE BUILDING CODE, WAC CHAPTER 51-50) IRC 2012 (STATE BUILDING CODE, WAC CHAPTER 51-51)
STRUCTURAL CODE	IBC 2012 (STATE BUILDING CODE, WAC CHAPTER 51-50)
PLUMBING CODE	UPC 2012 (STATE BUILDING CODE, WAC CHAPTER 51-56 AND 51-57)
MECHANICAL CODE	IMC 2012 (STATE BUILDING CODE, WAC CHAPTER 51-52)
ELECTRICAL CODE (WAC) 296-46B)	NEC 2008 [LAWS, RULES & REG. FOR INSTALLING EL. WIRES & EQUIP.
FIRE/LIFE SAFETY CODE	IFC 2012 (STATE BUILDING CODE, WAC CHAPTER 51-54

FACILITY IS UNMANNED AND NOT FOR HUMAN HABITATION. HANDICAPPED ACCESS REQUIREMENTS ARE NOT REQUIRED IN ACCORDANCE WITH THE 2012 IBC BUILDING CODE.

CONCRETE NOTES:

1. ALL CONCRETE CONSTRUCTION SHALL BE IN ACCORDANCE WITH ACI-318.

2. CONCRETE SHALL BE MIXED, PROPORTIONED, CONVEYED AND PLACED IN ACCORDANCE WITH CHAPTER 19 OF THE IBC 2012. STRENGTHS AT 28 DAYS AND MIX CRITERIA SHALL BE AS FOLLOWS:

TYPE OF CONSTRUCTION	28 DAY STRENTHS (f'c)	W/C RATIO	MINIMUM CEMENT CONTENT PER CUBIC YARD
A. SLABS ON GRADE TOPPING SLABS CONCRETE PIERS	2,500 PSI	≤ 0.45	5 SACKS
B. ALL STRUCTURAL CONCRETE EXCEPT WALLS	4,000 PSI	≤ 0.45	6 1/2 SACKS
C. CONCRETE WALLS	4,000 PSI	≤ 0.45	6 1/2 SACKS

CEMENT SHALL BE ASTM C150, PORTLAND CEMENT TYPE II U.N.O.

2. THE GENERAL CONTRACTOR SHALL SUPERVISE AND BE RESPONSIBLE FOR THE METHODS AND PROCEDURES OF CONCRETE PLACEMENT.

3. ALL CONCRETE WITH SURFACES EXPOSED TO STANDING WATER SHALL BE AIR-ENTRAINED WITH AN AIR-ENTRAINING AGENT CONFORMING TO ASTM C260, C494, C618, C989 AND C1017. TOTAL AIR CONTENT SHALL BE IN ACCORDANCE WITH TABLE 1904.2 OF THE IBC 2012.

4. REINFORCING STEEL SHALL CONFORM TO ASTM A615 (INCLUDING SUPPLEMENT S1), GRADE 60, fy=60,000 PSI. EXCEPTIONS: ANY BARS SPECIFICALLY SO NOTED ON THE DRAWINGS SHALL BE GRADE 40, fy=40,000 PSI. GRADE 60 REINFORCING BARS INDICATED ON DRAWINGS TO BE WELDED SHALL CONFORM TO ASTM A706. REINFORCING COMPLYING WITH ASTM A615(S1) MAY BE WELDED ONLY IF MATERIAL PROPERTY REPORTS INDICATING CONFORMANCE WITH WELDING PROCEDURES SPECIFIED IN A.W.S. D14 ARE SUBMITTED.

5. REINFORCING STEEL SHALL BE DETAILED (INCLUDING HOOKS AND BENDS) IN ACCORDANCE WITH ACI 315 AND 318. LAP ALL CONTINUOUS REINFORCEMENT AT LEAST 30 BAR DIAMETERS OR A MINIMUM OF 2'-0". PROVIDE CORNER BARS AT ALL WALL AND FOOTING INTERSECTIONS. LAP CORNER BARS AT LEAST 30 BAR DIAMETERS OR A MINIMUM OF 2'-0". LAP ADJACENT MATS OF WELDED WIRE FABRIC A MINIMUM OF 6" AT SIDES AND ENDS.

6. WELDED WIRE FABRIC SHALL CONFORM TO ASTM A-185.

7. SPIRAL REINFORCEMENT SHALL BE PLAIN WIRE CONFORMING TO ASTM A615, GRADE 60, fy=60,000 PSI

8. NO BARS PARTIALLY EMBEDDED IN HARDENED CONCRETE SHALL BE FIELD BENT UNLESS SPECIFICALLY SO DETAILED OR APPROVED BY THE CONSULTANT.

10. CONCRETE PROTECTION (COVER) FOR REINFORCING STEEL SHALL BE AS FOLLOWS:

- CONCRETE CAST AGAINST AND PERMANENTLY EXPOSED TO EARTH	3"
- CONCRETE EXPOSED TO EARTH OR WEATHER	
(#6 BARS OR LARGER)	2"
(#5 BARS OR SMALLER)	1 1/2"
- CONCRETE NOT EXPOSED TO WEATHER OR IN CONTACT WITH GROUND	
(SLABS, WALLS AND JOISTS) (#11 BARS AND SMALLER)	3/4"
(BEAMS, COLUMNS) (PRIMARY REINFORCEMENT, TIES, STIRRUPS, SPIRALS)	1 1/2"

11. BARS SHALL BE SUPPORTED ON CHAIRS OR DOBIE BRICKS.

12. ANCHOR BOLTS TO CONFORM TO ASTM A307.

13. NON-SHRINK GROUT SHALL BE FURNISHED BY AN APPROVED MANUFACTURER AND SHALL BE MIXED AND PLACED IN STRICT ACCORDANCE WITH THE MANUFACTURER'S PUBLISHED RECOMMENDATIONS. GROUT STRENGTH SHALL BE AT LEAST EQUAL TO THE MATERIAL ON WHICH IT IS PLACED (3,000 PSI MINIMUM).

14. ALL EXPANSION ANCHORS TO BE HILTI BRAND. ADHESIVE ANCHORS REQUIRE TESTING TO CONFIRM CAPACITY UNLESS WAIVED BY ENGINEER.

STRUCTURAL STEEL NOTES:

1. SHOP DRAWINGS FOR STRUCTURAL STEEL SHALL BE SUBMITTED TO THE CONSULTANT FOR REVIEW PRIOR TO FABRICATION.

2. STRUCTURAL STEEL DESIGN, FABRICATION AND ERECTION (INCLUDING FIELD WELDING, HIGH STRENGTH FIELD BOLTING, EXPANSION BOLTS, AND THREADED EXPANSION ANCHORS) SHALL BE BASED ON THE A.I.S.I. "SPECIFICATION FOR THE DESIGN, FABRICATION, AND ERECTION OF STRUCTURAL STEEL FOR BUILDINGS" LATEST EDITION. SUPERVISION SHALL BE IN ACCORDANCE WITH IBC 2012 CHAPTER 22, BY A QUALIFIED TESTING AGENCY DESIGNATED BY THE CONSULTANT. THE CONSULTANT SHALL BE FURNISHED WITH A COPY OF ALL INSPECTION REPORTS AND TEST RESULTS.

3. STRUCTURAL STEEL SHALL CONFORM TO THE FOLLOWING REQUIREMENTS:

TYPE OF MEMBER	
A. WIDE FLANGE SHAPE	ASTM A992, Fy 50 KSI
B. OTHER SHAPE, PLATES AND ROD	ASTM A36, Fy 36 KSI
C. PIPE COLUMNS	ASTM A53, Fy 35 KSI
D. STRUCTURAL TUBING	ASTM A500, Fy 46 KSI
E. ANCHOR BOLTS	ASTM A307
F. CONNECTION BOLTS	ASTM A325

4. ALL MATERIAL TO BE HOT DIPPED GALVANIZED AFTER FABRICATION PER A123/A123M-13.

5. ALL WELDING SHALL BE IN CONFORMANCE WITH A.I.S.I. AND AWS STANDARDS AND SHALL BE PERFORMED BY W.A.B.O. CERTIFIED WELDERS USING E70 XX ELECTRODES. ONLY PREQUALIFIED WELDS (AS DEFINED BY AWS) SHALL BE USED. WELDING OF GRADE 60 REINFORCING BARS (IF REQUIRED) SHALL BE PERFORMED USING LOW HYDROGEN ELECTRODES. WELDING OF GRADE 40 REINFORCING BARS (IF REQUIRED) SHALL BE PERFORMED USING E70 XX ELECTRODES. WELDING WITHIN 4" OF COLD BENDS IN REINFORCING STEEL IS NOT PERMITTED. SEE REINFORCING NOTE FOR MATERIAL REQUIREMENTS OF WELDED BARS.

6. COLD-FORMED STEEL FRAMING MEMBERS SHALL BE OF THE SHAPE, SIZE, AND GAGE SHOWN ON THE PLANS. PROVIDE MINIMUM SECTION PROPERTIES INDICATED. ALL COLD-FORMED STEEL FRAMING SHALL CONFORM TO THE A.I.S.I. "SPECIFICATION FOR THE DESIGN OF COLD-FORMED STEEL STRUCTURAL MEMBERS."

7. BOLTED CONNECTIONS SHALL USE BEARING TYPE ASTM A325 BOLTS (3/4" DIA.) AND SHALL HAVE A MINIMUM OF TWO BOLTS UNLESS NOTED OTHERWISE.

8. NON-STRUCTURAL CONNECTIONS FOR STEEL GRATING MAY USE 5/8" DIA. ASTM A307 BOLTS UNLESS NOTED OTHERWISE.

9. ALL STEEL WORK SHALL BE PAINTED IN ACCORDANCE WITH THE DESIGN & CONSTRUCTION SPECIFICATION AND IN ACCORDANCE WITH ASTM A36 UNLESS NOTED OTHERWISE.

10. ALL WELDS TO BE 1/4" FILLET UNLESS NOTED OTHERWISE.

11. TOUCH UP ALL FIELD DRILLING AND WELDING WITH 2 COATS OF GALVACON (ZINC RICH PAINT) OR APPROVED EQUAL.

TOWER/POLE NOTES:

1. VERIFICATION THAT THE PROPOSED TOWER/POLE CAN SUPPORT THE PROPOSED ANTENNA LOADING IS TO BE DONE BY OTHERS.

2. PROVIDE SUPPORTS FOR THE ANTENNA COAX CABLES TO THE ELEVATION OF ALL INITIAL AND FUTURE ANTENNAS. ANTENNA COAX CABLES ARE TO BE SUPPORTED AND RESTRAINED AT THE CENTERS SUITABLE TO THE MANUFACTURER'S REQUIREMENTS.

ABBREVIATED ROOFTOP SAFETY PROCEDURES (WHEN APPLICABLE):

(AS PER "ACCIDENT PREVENTION PROGRAM" - BY PERMISSION OF WREN CONSTRUCTION, INC. - 03/01/89)

FALL PROTECTION METHODS AND EQUIPMENT
ROOF TOP INSTALLATIONS

1. FOR WORK IS BEING PERFORMED WITHIN 25' OF AN UNPROTECTED ROOF EDGE, THE CONSTRUCTION SUPERVISOR SHALL DESIGNATE A TRAINED SAFETY MONITOR TO OBSERVE THE MOVEMENTS AND ACTIVITIES OF THE CONSTRUCTION WORKERS.

2. SAFETY MONITOR SHALL WARN CONSTRUCTION WORKERS OF HAZARDS (I.E., BACKING UP TOWARD A ROOF EDGE, ETC.) OR UNSAFE ACTIVITIES. THE SAFETY MONITOR MUST BE ON THE SAME ROOF AND WITHIN VISUAL AND VERBAL DISTANCE OF THE CONSTRUCTION WORKERS.

3. CONSTRUCTION INVOLVING WORKERS TO APPROACH WITHIN 6' OR LESS OF AN UNPROTECTED ROOF EDGE, REQUIRES WORKERS TO USE SAFETY LINE.

4. SAFETY LINE SHALL BE MINIMUM 1/2" DIAMETER NYLON, WITH A NOMINAL TENSILE STRENGTH OF 5400 LBS.

5. SAFETY LINE SHALL BE ATTACHED TO A SUBSTANTIAL MEMBER OF THE STRUCTURE.

6. SAFETY LINE LENGTH SHALL BE SET ALLOWING CONSTRUCTION WORKER TO REACH EDGE OF ROOF, BUT NOT BEYOND.

7. SAFETY BELTS SHALL BE WORN BY ALL CONSTRUCTION WORKERS.

8. MONTHLY SAFETY INSPECTION AND MAINTENANCE OF THE FALL PROTECTION EQUIPMENT SHALL OCCUR BY THE SAFETY COMMITTEE REPRESENTATIVES, INCLUDING:

   INSPECTION OF CONSTRUCTION AREA FOR HAZARDS
   USE OF AN INSPECTION CHECKLIST
   INTERVIEWING COWORKERS REGARDING SAFETY CONCERNS
   REPORTING AND DOCUMENTING ANY HAZARDS
   REPORTING HAZARDS TO THE SAFETY COMMITTEE FOR CONSIDERATION
   POSTING RESULTS OF INSPECTION AND ANY ACTION TAKEN
   RECEIVING AN UNBIASED REVIEW OF ONE'S OWN WORK AREA BY ANOTHER COWORKER SAFETY REPRESENTATIVE

REFER TO ROOFTOP WORK AREA SAFETY PROTOCOL
NATIONAL ASSOCIATION OF TOWER ERECTORS 2000 PUBLICATION

REFERENCED OSHA REGULATIONS/STANDARDS SHALL BE REVIEWED BY TOWER ERECTORS, EQUIPMENT INSTALLERS, AND TOWER/ROOF TOP CONTRACTORS/SUBCONTRACTORS
29 CFR 1926.500 - SCOPE, APPLICATION, AND DEFINITIONS
29 CFR 1926.501 - DUTY TO HAVE FALL PROTECTION
19 CFR 1926.502 - FALL PROTECTION SYSTEMS CRITERIA AND PRACTICES

CALL TWO WORKING DAYS BEFORE YOU DIG!
811
NATIONAL UTILITIES UNDERGROUND LOCATE
SAFETY PRECAUTION SHALL BE IMPLEMENTED BY CONTRACTOR(S) AT ALL TRENCHES IN ACCORDANCE WITH CURRENT OSHA STANDARDS
ELECTRIC - RED SEWER - GREEN GAS/OIL - YELLOW SURVEY - PINK TEL/CATV - ORANGE PROPOSED - WHITE WATER - BLUE

SYMBOLS AND ABBREVIATIONS

A/C	AIR CONDITIONING	MAX	MAXIMUM
AGL	ABOVE GRADE LEVEL	MECH	MECHANICAL
APPROX	APPROXIMATELY	MTL	METAL
		MFR	MANUFACTURE
BLDG	BUILDING	MGR	MANAGER
BLK	BLOCKING	MIN	MINIMUM
B.O.	BOTTOM OF	MISC	MISCELLANEOUS
B.O.S.	BOTTOM OF STEEL		
		N/A	NOT APPLICABLE
CLG	CEILING	N/C	NOT IN CONTRACT
CLR	CLEAR	N.S.	NEAR SIDE
CMU	CONCRETE MASONRY UNIT	NTS	NOT TO SCALE
CONC	CONCRETE		
CONST	CONSTRUCTION	O.C.	ON CENTER
CONT	CONTINUOUS	O.D.	OUTSIDE DIAMETER
		O/H	OVERHEAD
DBL	DOUBLE		
DIA/Ø	DIAMETER	PLCS	PLACES
DIAG	DIAGONAL	PLYWD	PLYWOOD
DN	DOWN	PROJ	PROJECT
DET	DETAIL	PROP	PROPERTY
DWG	DRAWING	PSF	POUNDS PER SQUARE FOOT
		PSI	POUNDS PER SQUARE INCH
EA	EACH	PT	PRESSURE TREATED
EL	ELEVATION		
ELEC	ELECTRICAL	RAD	RADIUS
EQ	EQUAL	REQ	REQUIRED
EQUIP	EQUIPMENT	RM	ROOM
E.W.	EACH WAY	RO	ROUGH OPENING
EXT	EXTERIOR		
		SCH	SCHEDULE
FIN	FINISH	SHT	SHEET
FLUOR	FLUORESCENT	SIM	SIMILAR
FLR	FLOOR	SPEC	SPECIFICATION
F.S.	FAR SIDE	SF	SQUARE FOOT
FT	FOOT	SS	STAINLESS STEEL
		STL	STEEL
GA	GAUGE	STRUCT	STRUCTURAL
GALV	GALVANIZED	STD	STANDARD
G.C.	GENERAL CONTRACTOR	SQ FT	SQUARE FOOT
GRND	GROUND	SQ IN	SQUARE INCH
GYP BD	GYPSUM WALL BOARD	SUSP	SUSPENDED
HORZ	HORIZONTAL	THK	THICK
HR	HOUR	THRU	THROUGH
HT	HEIGHT	TNNG	TINNED
HVAC	HEATING VENTILATION AIR CONDITIONING	T.O.	TOP OF
		T.O.S.	TOP OF STEEL
		TYP	TYPICAL
I.D.	INSIDE DIAMETER		
IN	INCH	UNO	UNLESS NOTED OTHERWISE
INFO	INFORMATION		
INSUL	INSULATION	VERT	VERTICAL
INT	INTERIOR	V.I.F.	VERIFY IN FIELD
IBC	INTERNATIONAL BUILDING CODE		
		W/	WITH
LBS	POUNDS	W/O	WITHOUT
		WP	WATER PROOF

ℙ	PLATE	—o—o—o—o—	CHAIN-LINK FENCE
℄	CENTERLINE	—x—o—x—o—	CHAIN-LINK FENCE W/ BARB WIRE
(E)	EXISTING	—o—o—o—o—	WOOD FENCE
		— T — T —	TELEPHONE
#/X-#	DETAIL NUMBER / SHEET NUMBER	— P — P —	POWER
		- - - - - -	GROUND WIRE
		—— COAX ——	COAXIAL CABLE

SPECIAL INSPECTIONS:

SPECIAL INSPECTIONS IN ACCORDANCE WITH IBC 2012 SECTION 1704.

SOILS/GEOTECHNICAL:
- ☐ SHORING INSTALLATION AND MONITORING
- ☐ OBSERVE AND MONITOR EXCAVATION
- ☐ VERIFY SOIL BEARING ______ psf BEARING
- ☐ SUBSURFACE DRAINAGE PLACEMENT
- ☐ VERIFY FILL MATERIAL AND COMPACTION
- ☐ VERIFY CONDITIONS AS ANTICIPATED
- ☐ PILE PLACEMENT (AUGER CAST/DRIVEN PILE)
- ☐ OTHER

REINFORCED CONCRETE:
- ☐ REINFORCING STEEL AND CONCRETE PLACEMENT
- ☐ PRESTRESSED/PRECAST CONCRETE FABRICATION AND ERECTION
- ☐ BATCH PLANT INSPECTION
- ☐ SHOTCRETE
- ☐ GROUTING
- ☐ OTHER

STRUCTURAL STEEL:
- ☒ FABRICATION AND SHOP WELDS
- ☐ ERECTION AND FIELD WELDS AND BOLTING
- ☐ OTHER ______

STRUCTURAL ALUMINUM:
- ☐ FABRICATION AND SHOP WELDS
- ☐ ERECTION AND FIELD WELDS AND BOLTING
- ☐ OTHER ______

STRUCTURAL MASONRY:
- ☐ CONTINUOUS
- ☐ PERIODIC
- ☐ OTHER ______

OTHER: STRUCTURAL OBSERVATION FOR SEISMIC RESISTANCE STRUCTURE HEIGHT > 75' PER IBC 1704.5

ANCHORING TO CONCRETE:
- ☐ BOLTS INSTALLED IN CONCRETE
- ☐ POST-INSTALLATION ADHESIVE ANCHORS
- ☒ POST-INSTALLATION MECHANICAL ANCHORS

at&t
Your world. Delivered.

PLANS PREPARED BY:
CORNERSTONE ENGINEERING, INC
15920 WOODINVILLE-REDMOND RD NE, SUITE 210
WOODINVILLE, WA 98072
PHONE: 425.487.1732
EMAIL: cei@cornerstone-engr.com
WWW.CORNERSTONE-ENGR.COM

PROJECT INFO:
YA01
SELAH
2.3 MILES SOUTHEAST CRUSHER CANYON
SELAH, WA 98942
YAKIMA COUNTY

ISSUED FOR:
CONSTRUCTION

REV:	DATE:	ISSUED FOR:	BY:
5	03-25-16	REVIEW COMMENTS	AJB
4	02-29-16	PER COMMENTS	LJS
3	02-01-16	FINAL, PER CITY COMMENTS	LJS
2	01-18-16	FINAL, PER CLIENT REVISION	DRA

DRAWN BY:	CHK.:	APV.:
JRF	MWO	MWO

CURRENT ISSUE DATE:
03-25-16

LICENSURE:
MARK WESLEY OLSON
STATE OF WASHINGTON
32204
REGISTERED
PROFESSIONAL ENGINEER
3/25/16

JURISDICTIONAL APPROVAL:

PROPRIETARY INFORMATION:
DO NOT SCALE DRAWINGS. CONTRACTOR MUST VERIFY ALL DIMENSIONS AND ADVISE CONSULTANTS OF ANY ERRORS AND OMISSIONS. ALL PREVIOUS ISSUES OF THIS DRAWING ARE SUPERSEDED BY THE LATEST REVISION. THE INFORMATION CONTAINED IN THIS SET OF DOCUMENTS IS PROPRIETARY BY NATURE. ANY USE OR DISCLOSURE OTHER THAN WHICH IS RELATED TO NAMED CLIENT IS STRICTLY PROHIBITED.

DRAWING TITLE:
GENERAL NOTES

DRAWING NUMBER:
G-1 | 5

CEI JOB NUMBER: LTE 3C/4C 14-13046

THIS IS NOT A SURVEY

ALL INFORMATION AND TRUE NORTH HAVE BEEN OBTAINED FROM EXISTING DRAWINGS AND ARE APPROXIMATE.

LEGAL DESCRIPTION (PARCEL #: 3004)

BEG SE COR SEC, TH N 35'47 W 2647.79 FT TH S 89°15'35 W 573.75 FT, TH N 58°02'54 W 769.7 FT, TH N 31°57'06 E 165 FT TO TRUE POB, TH N 31°57'06 E 75 FT >TH N 31°57'06 E 75 FT, TH N 58°02'54 W 50FT, TH S 31°57'06 W 75 FT, TH S 58°02'54 E50 FT TO TRUE POB

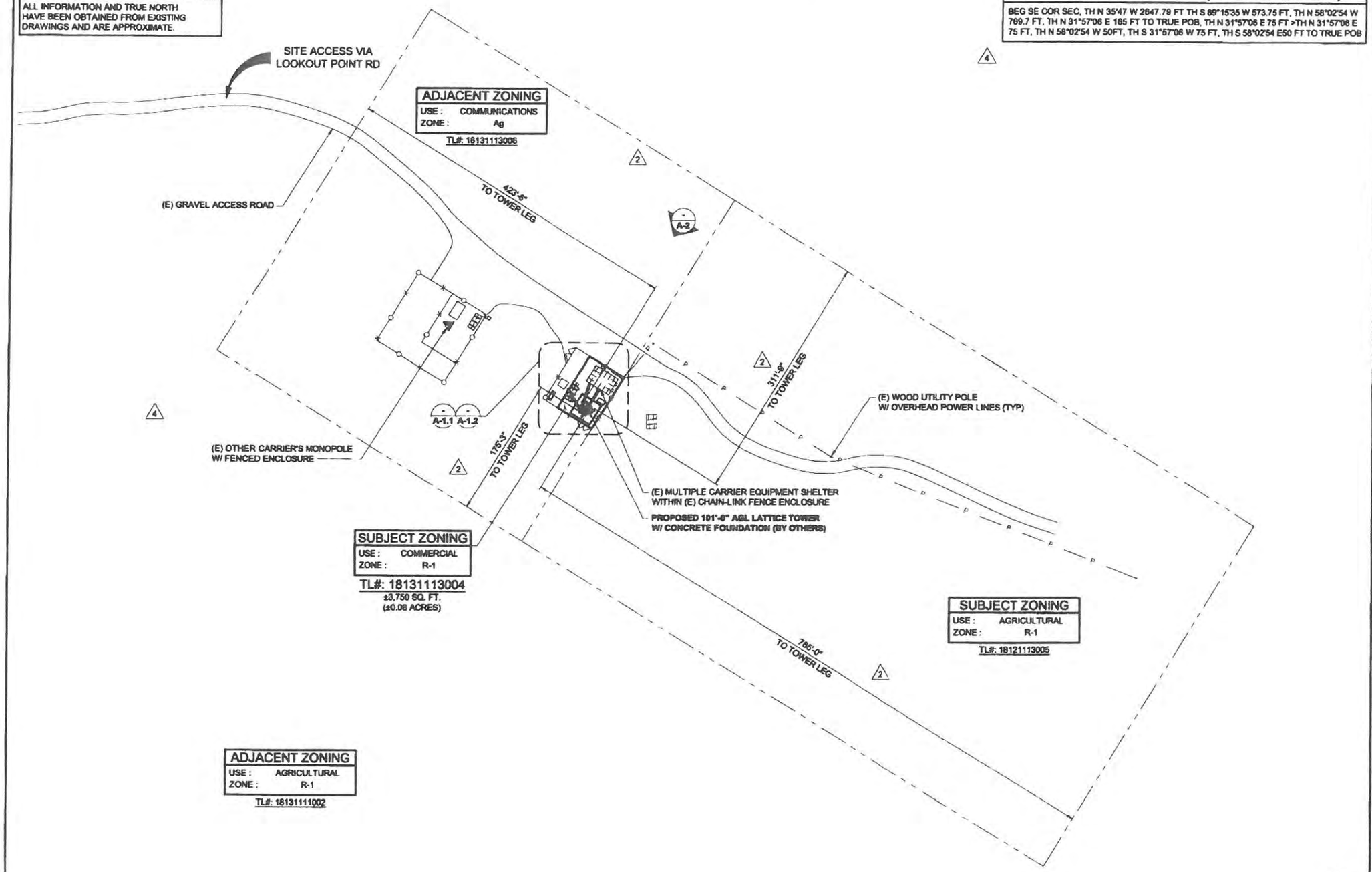

SITE PLAN

22x34 SCALE: 1" = 60'-0" | 11x17 SCALE: 1" = 120'-0"

1

at&t Your world. Delivered.

PLANS PREPARED BY:

CORNERSTONE ENGINEERING, INC.
18928 WOODINVILLE-REDMOND RD NE, SUITE 210
WOODINVILLE, WA 98072
PHONE: 425.487.1732
EMAIL: cei@cornerstone-engr.com
WWW.CORNERSTONE-ENGR.COM

PROJECT INFO:

YA01

SELAH

2.3 MILES SOUTHEAST CRUSHER CANYON
SELAH, WA 98942
YAKIMA COUNTY

ISSUED FOR:

CONSTRUCTION

REV:	DATE:	ISSUED FOR:	BY:
5	03-25-16	REVIEW COMMENTS	AJB
4	02-29-16	PER COMMENTS	LJS
3	02-01-16	FINAL, PER CITY COMMENTS	LJS
2	01-18-16	FINAL, PER CLIENT REVISION	DRA

DRAWN BY:	CHK.:	APV.:
JRF	MWO	MWO

CURRENT ISSUE DATE:

03-25-16

LICENSURE:

MARK WESLEY OLSON, STATE OF WASHINGTON, 32284, REGISTERED PROFESSIONAL ENGINEER
3/25/16

JURISDICTIONAL APPROVAL:

PROPRIETARY INFORMATION:

DO NOT SCALE DRAWINGS. CONTRACTOR MUST VERIFY ALL DIMENSIONS AND ADVISE CONSULTANTS OF ANY ERRORS AND OMISSIONS. ALL PREVIOUS ISSUES OF THIS DRAWING ARE SUPERSEDED BY THE LATEST REVISION. THE INFORMATION CONTAINED IN THIS SET OF DOCUMENTS IS PROPRIETARY BY NATURE. ANY USE OR DISCLOSURE OTHER THAN WHICH IS RELATED TO NAMED CLIENT IS STRICTLY PROHIBITED.

DRAWING TITLE:

SITE PLAN

DRAWING NUMBER:

A-1 | 5

CEI JOB NUMBER: LTE 3C/4C 14-13046

NOTE:

1. AT&T SHALL BE RESPONSIBLE, AT ITS OWN EXPENSE, FOR DISMANTLING THE OLD TOWER IN A CONDITION THAT LEAVES IT REUSABLE.
2. TOWER SHALL BE INSTALLED FOLLOWING R56 GROUNDING STANDARDS OR BETTER.
3. SEE RF-1 FOR ANTENNA PLAN

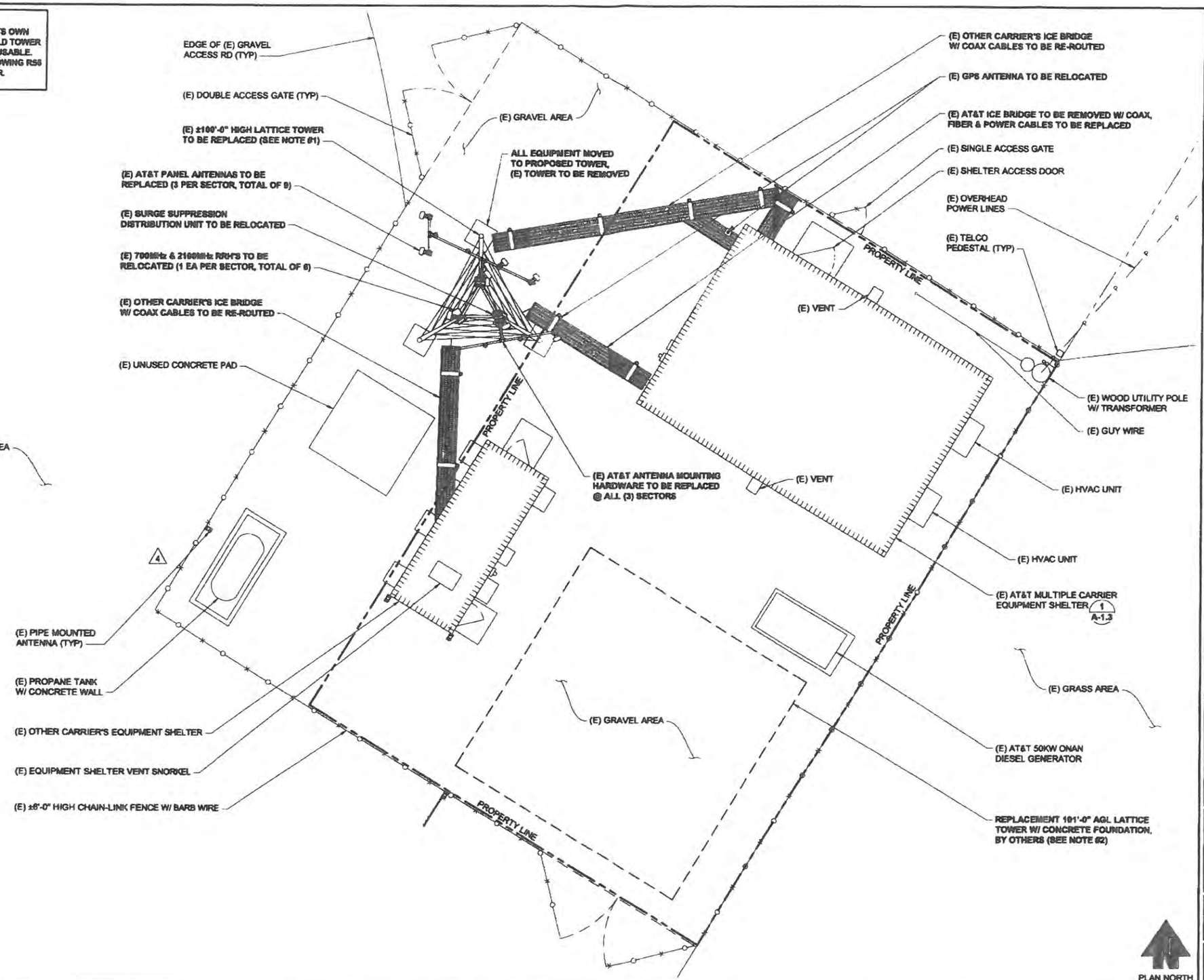

EXISTING ENLARGED SITE PLAN

22x34 SCALE: 3/16" = 1'-0" | 11x17 SCALE: 3/32" = 1'-0"

1

at&t
Your world. Delivered.

PLANS PREPARED BY:

CORNERSTONE ENGINEERING, INC
16928 WOODINVILLE-REDMOND RD NE, SUITE 210
WOODINVILLE, WA 98072
PHONE: 425.487.1732
EMAIL: cei@cornerstone-engr.com
WWW.CORNERSTONE-ENGR.COM

PROJECT INFO:

YA01

SELAH

2.3 MILES SOUTHEAST CRUSHER CANYON
SELAH, WA 98942
YAKIMA COUNTY

ISSUED FOR:

CONSTRUCTION

REV:	DATE:	ISSUED FOR:	BY:
5	03-25-16	REVIEW COMMENTS	AJB
4	02-29-16	PER COMMENTS	LJS
3	02-01-16	FINAL, PER CITY COMMENTS	LJS
2	01-18-16	FINAL, PER CLIENT REVISION	DRA

DRAWN BY:	CHK.:	APV.:
JRF	MWO	MWO

CURRENT ISSUE DATE:

03-25-16

LICENSURE:

MARK WESLEY OLSON
STATE OF WASHINGTON
22284
REGISTERED PROFESSIONAL ENGINEER
3/25/16

JURISDICTIONAL APPROVAL:

PROPRIETARY INFORMATION:

DO NOT SCALE DRAWINGS. CONTRACTOR MUST VERIFY ALL DIMENSIONS AND ADVISE CONSULTANTS OF ANY ERRORS AND OMISSIONS. ALL PREVIOUS ISSUES OF THIS DRAWING ARE SUPERSEDED BY THE LATEST REVISION. THE INFORMATION CONTAINED IN THIS SET OF DOCUMENTS IS PROPRIETARY BY NATURE. ANY USE OR DISCLOSURE OTHER THAN WHICH IS RELATED TO NAMED CLIENT IS STRICTLY PROHIBITED.

DRAWING TITLE:

EXISTING ENLARGED SITE PLAN

DRAWING NUMBER:

A-1.1 | 5

CEI JOB NUMBER: LTE 3C/4C 14-13046

NOTE:
1. AT&T SHALL BE RESPONSIBLE, AT ITS OWN EXPENSE, FOR DISMANTLING THE OLD TOWER IN A CONDITION THAT LEAVES IT REUSABLE.
2. TOWER SHALL BE INSTALLED FOLLOWING R56 GROUNDING STANDARDS OR BETTER.
3. SEE RF-1 FOR ANTENNA PLAN

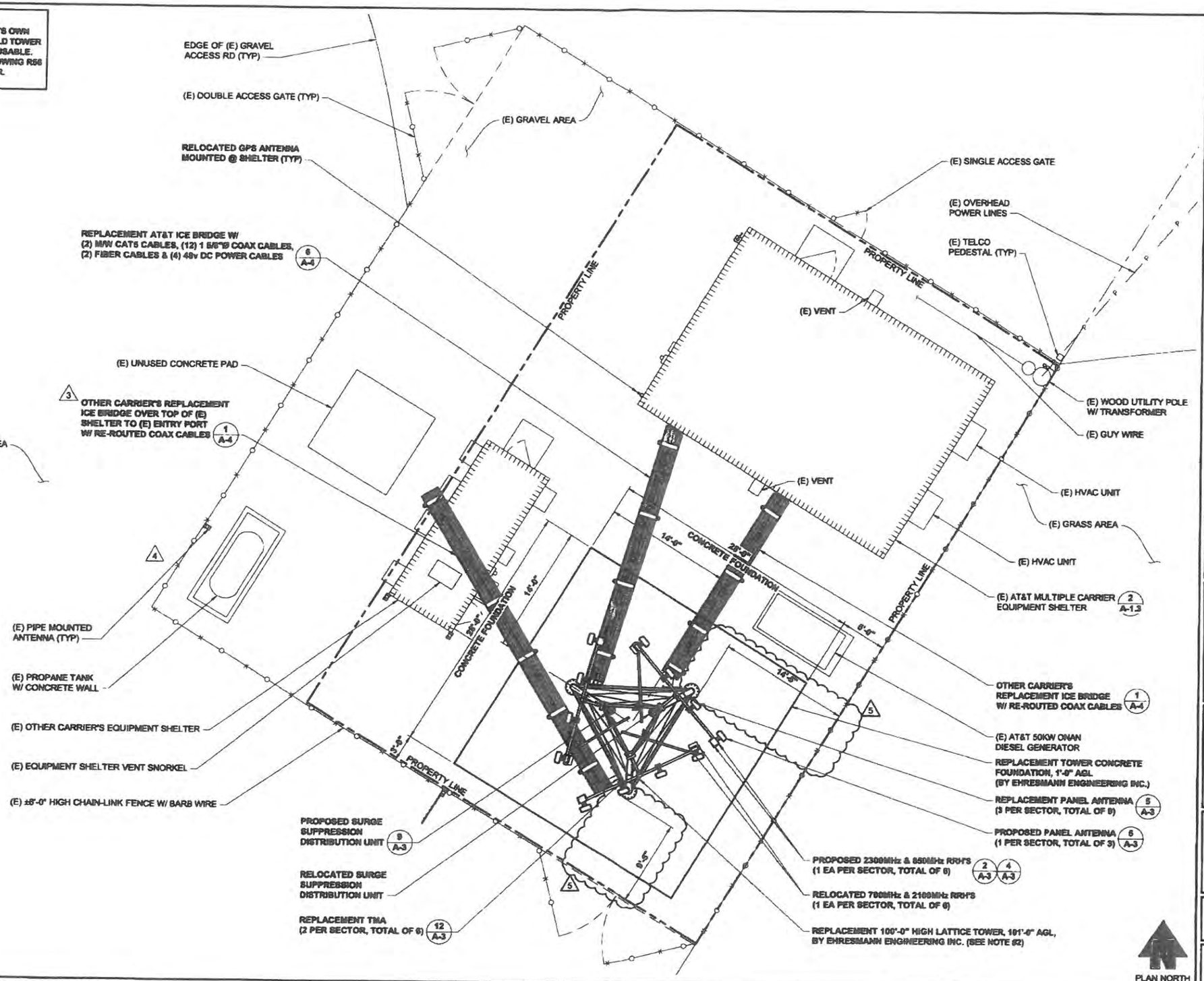

PROPOSED ENLARGED SITE PLAN

22x34 SCALE: 3/16" = 1'-0" | 11x17 SCALE: 3/32" = 1'-0"

1

at&t
Your world. Delivered.

PLANS PREPARED BY:

CORNERSTONE ENGINEERING, INC
16926 WOODINVILLE-REDMOND RD NE, SUITE 210
WOODINVILLE, WA 98072
PHONE: 425.487.1732
EMAIL: cei@cornerstone-engr.com
WWW.CORNERSTONE-ENGR.COM

PROJECT INFO:

YA01

SELAH

2.3 MILES SOUTHEAST CRUSHER CANYON
SELAH, WA 98942
YAKIMA COUNTY

ISSUED FOR:

CONSTRUCTION

REV:	DATE:	ISSUED FOR:	BY:
5	03-25-16	REVIEW COMMENTS	AJB
4	02-29-16	PER COMMENTS	LJS
3	02-01-16	FINAL, PER CITY COMMENTS	LJS
2	01-18-16	FINAL, PER CLIENT REVISION	DRA

DRAWN BY:	CHK.:	APV.:
JRF	MWO	MWO

CURRENT ISSUE DATE:

03-25-16

LICENSURE:

MARK WESLEY OLSON
STATE OF WASHINGTON
32202
REGISTERED PROFESSIONAL ENGINEER
3/25/16

JURISDICTIONAL APPROVAL:

PROPRIETARY INFORMATION:

DO NOT SCALE DRAWINGS. CONTRACTOR MUST VERIFY ALL DIMENSIONS AND ADVISE CONSULTANTS OF ANY ERRORS AND OMISSIONS. ALL PREVIOUS ISSUES OF THIS DRAWING ARE SUPERSEDED BY THE LATEST REVISION. THE INFORMATION CONTAINED IN THIS SET OF DOCUMENTS IS PROPRIETARY BY NATURE. ANY USE OR DISCLOSURE OTHER THAN WHICH IS RELATED TO NAMED CLIENT IS STRICTLY PROHIBITED.

DRAWING TITLE:

PROPOSED ENLARGED SITE PLAN

DRAWING NUMBER:

A-1.2 | 5

CEI JOB NUMBER: LTE 3C/4C 14-13046

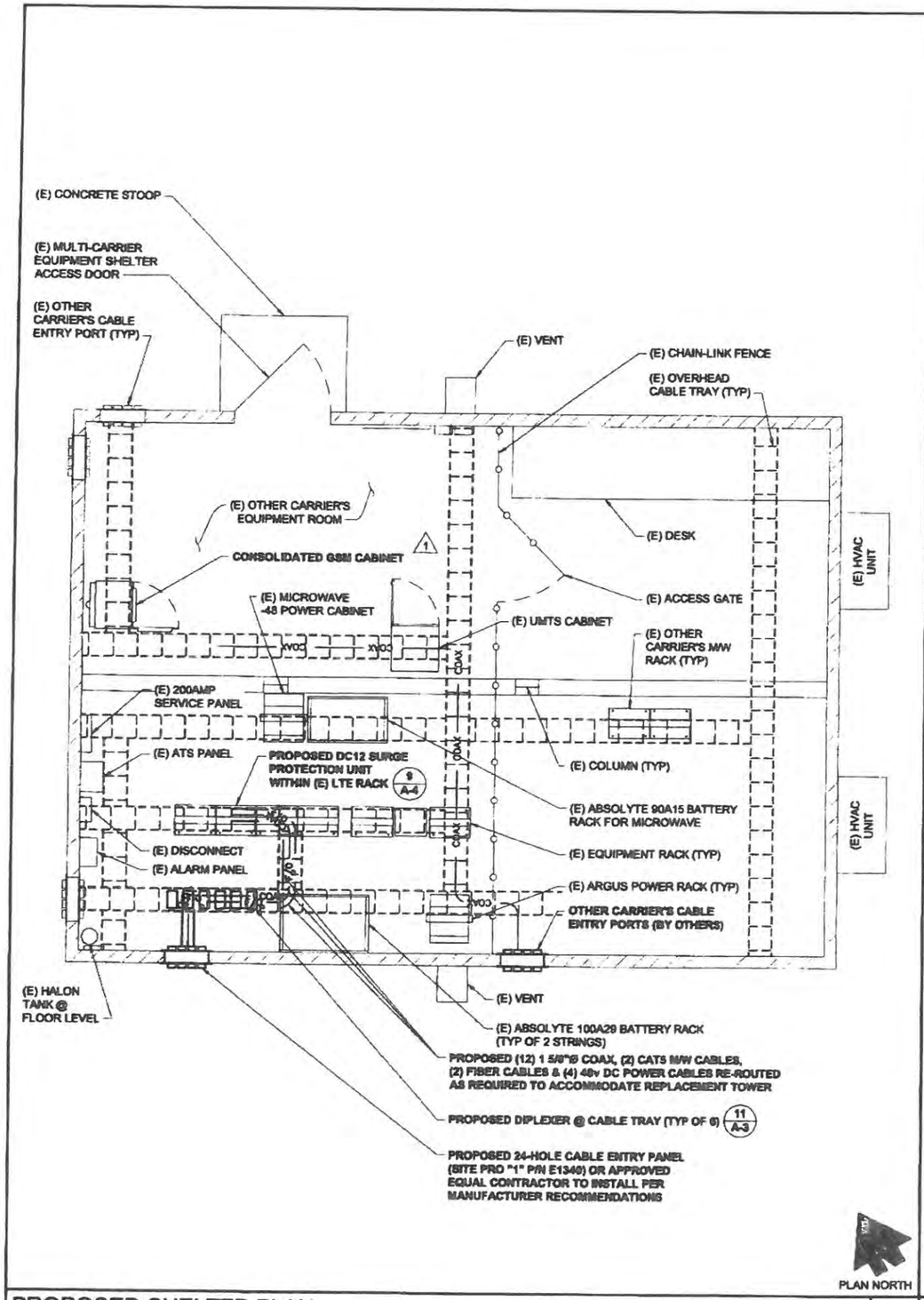

PROPOSED SHELTER PLAN

22x34 SCALE: 3/8" = 1'-0" | 11x17 SCALE: 3/16" = 1'-0"

2

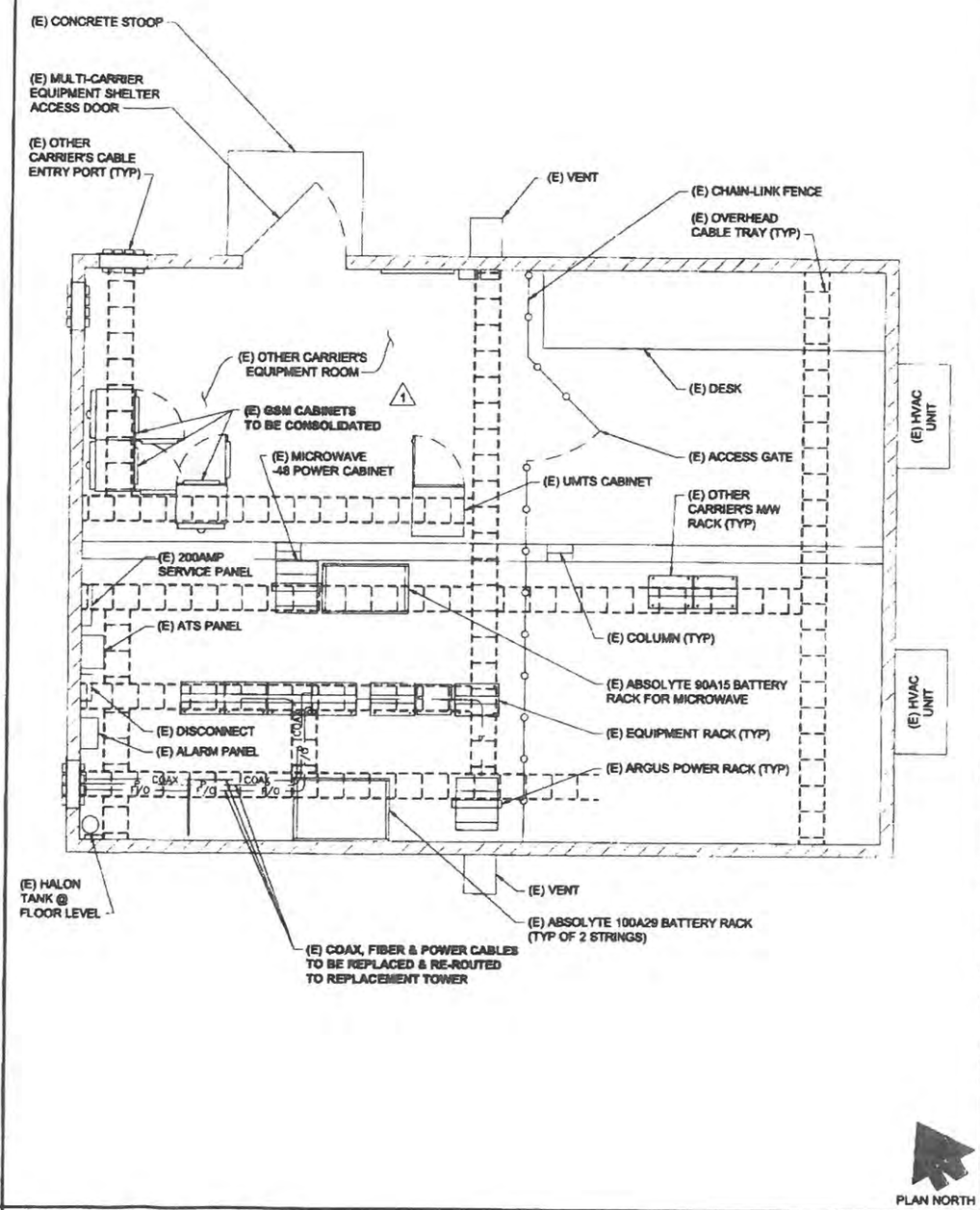

EXISTING SHELTER PLAN

22x34 SCALE: 3/8" = 1'-0" | 11x17 SCALE: 3/16" = 1'-0"

1

at&t
Your world. Delivered.

PLANS PREPARED BY:

CORNERSTONE ENGINEERING, INC
16828 WOODINVILLE-REDMOND RD NE, SUITE 210
WOODINVILLE, WA 98072
PHONE: 425.487.1782
EMAIL: cei@cornerstone-engr.com
WWW.CORNERSTONE-ENGR.COM

PROJECT INFO:

YA01

SELAH

2.3 MILES SOUTHEAST CRUSHER CANYON
SELAH, WA 98942
YAKIMA COUNTY

ISSUED FOR:

CONSTRUCTION

REV:	DATE:	ISSUED FOR:	BY:
5	03-25-16	REVIEW COMMENTS	AJB
4	02-29-16	PER COMMENTS	LJS
3	02-01-16	FINAL, PER CITY COMMENTS	LJS
2	01-18-16	FINAL, PER CLIENT REVISION	DRA

DRAWN BY:	CHK.:	APV.:
JRF	MWO	MWO

CURRENT ISSUE DATE:

03-25-16

LICENSURE:

JURISDICTIONAL APPROVAL:

PROPRIETARY INFORMATION:

DO NOT SCALE DRAWINGS. CONTRACTOR MUST VERIFY ALL DIMENSIONS AND ADVISE CONSULTANTS OF ANY ERRORS AND OMISSIONS. ALL PREVIOUS ISSUES OF THIS DRAWING ARE SUPERSEDED BY THE LATEST REVISION. THE INFORMATION CONTAINED IN THIS SET OF DOCUMENTS IS PROPRIETARY BY NATURE. ANY USE OR DISCLOSURE OTHER THAN WHICH IS RELATED TO NAMED CLIENT IS STRICTLY PROHIBITED.

DRAWING TITLE:

EXISTING & PROPOSED SHELTER PLANS

DRAWING NUMBER:

A-1.3 | 5

CEI JOB NUMBER: LTE 3C/4C 14-13046

NOTES:

1. PAINT PROPOSED ANTENNAS, MOUNTING HARDWARE AND COAX TO MATCH EXISTING CONDITIONS.
2. SEE RF-1 FOR EXISTING & PROPOSED ANTENNA PLANS.
3. TOWER TO BE PAINTED PER FAA REQUIREMENTS, ORANGE AND WHITE ALTERNATING STRIPES.

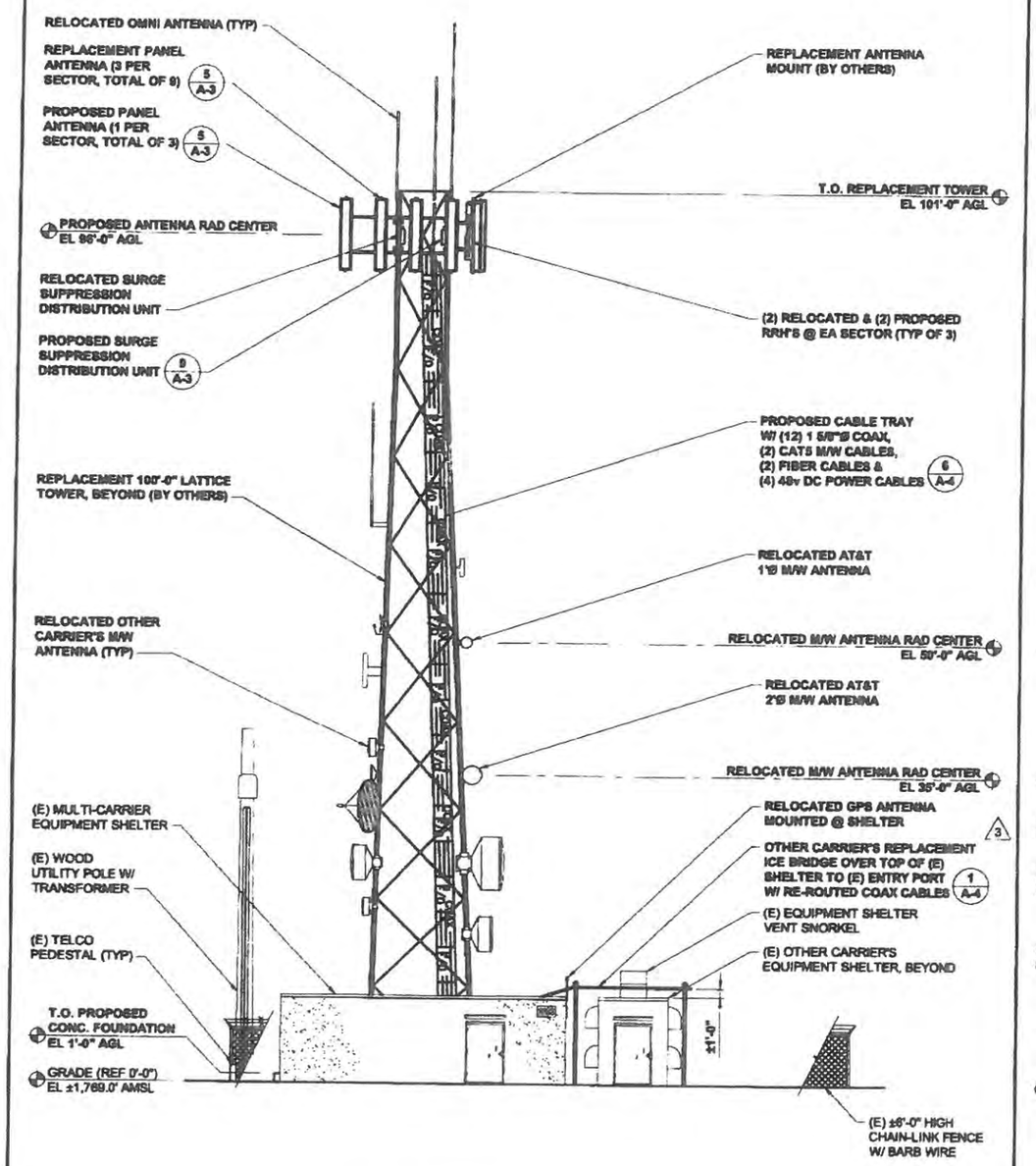

PROPOSED NORTHEAST ELEVATION

22x34 SCALE: 1/8" = 1'-0" | 11x17 SCALE: 1/16" = 1'-0"

2

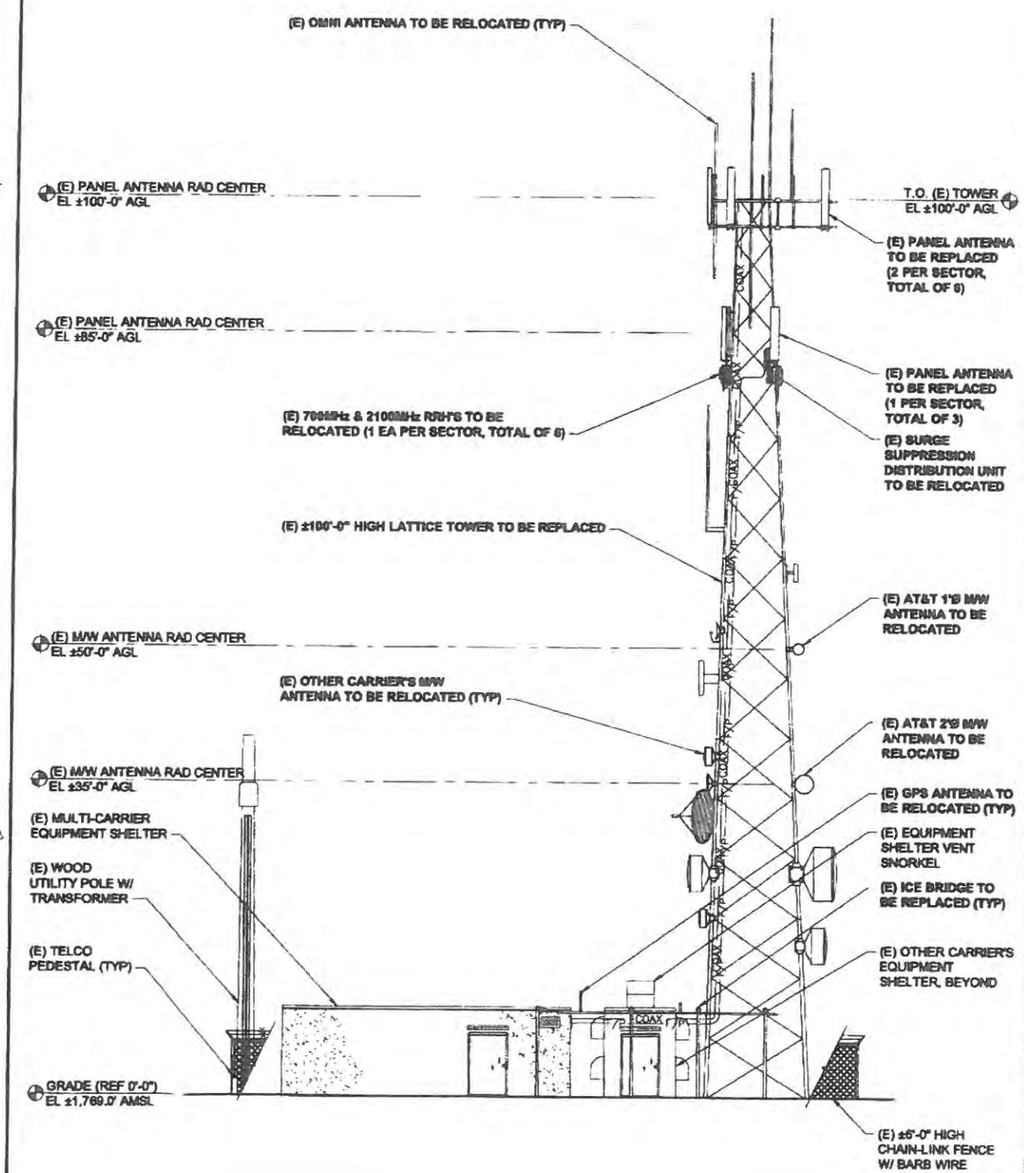

EXISTING NORTHEAST ELEVATION

22x34 SCALE: 1/8" = 1'-0" | 11x17 SCALE: 1/16" = 1'-0"

1

at&t
Your world. Delivered.

PLANS PREPARED BY:

CORNERSTONE ENGINEERING, INC.
18920 WOODINVILLE-REDMOND RD NE, SUITE 210
WOODINVILLE, WA 98072
PHONE: 425.487.1732
EMAIL: cei@cornerstone-engr.com
WWW.CORNERSTONE-ENGR.COM

PROJECT INFO:

YA01

SELAH

2.3 MILES SOUTHEAST CRUSHER CANYON
SELAH, WA 98942
YAKIMA COUNTY

ISSUED FOR:

CONSTRUCTION

REV:	DATE:	ISSUED FOR:	BY:
5	03-25-16	REVIEW COMMENTS	AJB
4	02-29-16	PER COMMENTS	LJS
3	02-01-16	FINAL, PER CITY COMMENTS	LJS
2	01-18-16	FINAL, PER CLIENT REVISION	DRA

DRAWN BY:	CHK.:	APV.:
JRF	MWO	MWO

CURRENT ISSUE DATE:

03-25-16

LICENSURE:

MARK WESLEY OLSON
STATE OF WASHINGTON
22201
REGISTERED PROFESSIONAL ENGINEER
3/25/16

JURISDICTIONAL APPROVAL:

PROPRIETARY INFORMATION:

DO NOT SCALE DRAWINGS. CONTRACTOR MUST VERIFY ALL DIMENSIONS AND ADVISE CONSULTANTS OF ANY ERRORS AND OMISSIONS. ALL PREVIOUS ISSUES OF THIS DRAWING ARE SUPERSEDED BY THE LATEST REVISION. THE INFORMATION CONTAINED IN THIS SET OF DOCUMENTS IS PROPRIETARY BY NATURE. ANY USE OR DISCLOSURE OTHER THAN WHICH IS RELATED TO NAMED CLIENT IS STRICTLY PROHIBITED.

DRAWING TITLE:

EXISTING & PROPOSED NORTHEAST ELEVATIONS

DRAWING NUMBER:

A-2 | 5

CEI JOB NUMBER: LTE 3C/4C 14-13046

TMA DETAIL (12)

22x34 SCALE: 3" = 1'-0" | 11x17 SCALE: 1 1/2" = 1'-0"

TOWER MOUNTED AMPLIFIER	
MANUFACTURER	COMMSCOPE
MODEL	E15Z01P13
HEIGHT	12.9"
WIDTH	7.2"
DEPTH	5.5"

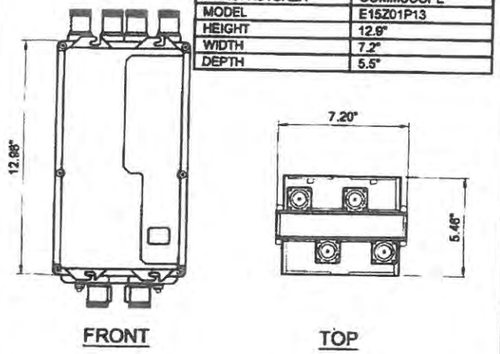

DIPLEXER DETAIL (11)

22x34 SCALE: 3" = 1'-0" | 11x17 SCALE: 1 1/2" = 1'-0"

DIPLEXER SPECS	
MANUFACTURER	COMMSCOPE
MODEL	CDX723A-DS
HEIGHT	8.9"
WIDTH	4.9"
DEPTH	2.4"
WEIGHT	6.2 lbs

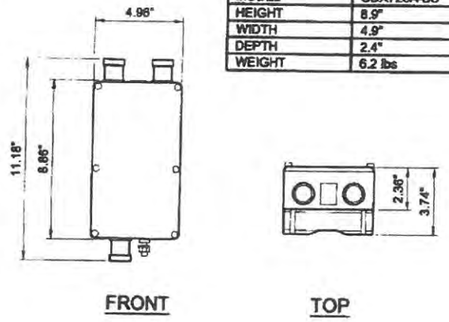

FIBER SLACK BOX (10)

22x34 SCALE: NTS | 11x17 SCALE: NTS

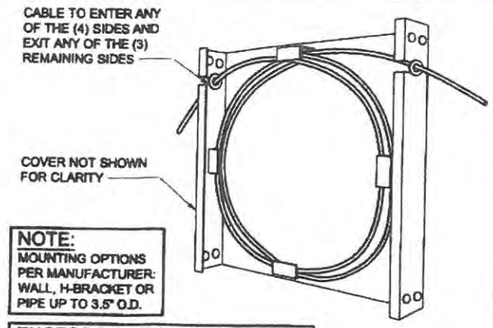

NOTE:
MOUNTING OPTIONS PER MANUFACTURER: WALL, H-BRACKET OR PIPE UP TO 3.5" O.D.

EXCESS FIBER BOX	
MANUFACTURER	RAYCAP
MODEL	FB-15-ABOX CEQ 10505
DIMENSIONS	18"x18"x4"
CAPACITY	30m (±115') OF 10mm

SURGE SUPPRESSOR (9)

22x34 SCALE: 1 1/2" = 1'-0" | 11x17 SCALE: 3/4" = 1'-0"

SURGE SUPPRESSION DISTRIBUTION UNIT	
MANUFACTURER	RAYCAP
MODEL	DC6-48-60-18-8F "SQUID"

NOTE:
TO BE INSTALLED WITHIN 6 FEET OF RADIO UNIT

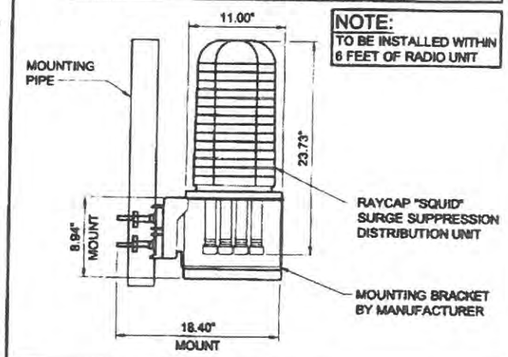

NOT USED (8)

22x34 SCALE: NTS | 11x17 SCALE: NTS

NOT USED (7)

22x34 SCALE: NTS | 11x17 SCALE: NTS

NOT USED (6)

22x34 SCALE: NTS | 11x17 SCALE: NTS

ANTENNA DETAIL (5)

22x34 SCALE: 1/2" = 1'-0" | 11x17 SCALE: 1/4" = 1'-0"

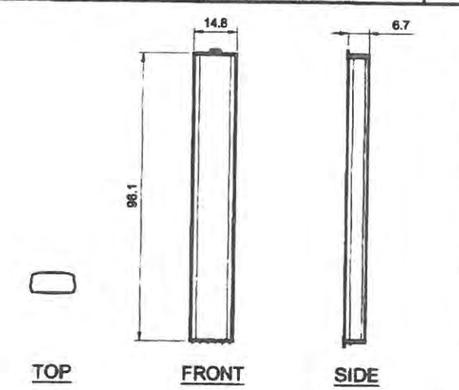

ANTENNA:
KATHREIN 800 10866

850MHz RRH (4)

22x34 SCALE: 1 1/2" = 1'-0" | 11x17 SCALE: 3/4" = 1'-0"

850MHz RRH	
MANUFACTURER	ALCATEL-LUCENT
MODEL	RRH4x25-WCS
HEIGHT	22.4"
WIDTH	8.3"
DEPTH	9.8"
WEIGHT	53 LBS

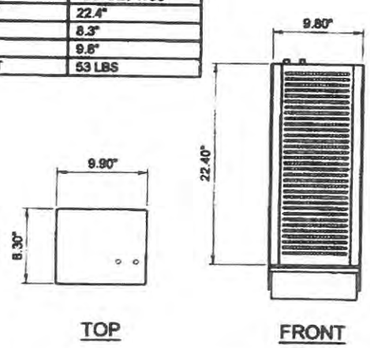

NOT USED (3)

22x34 SCALE: NTS | 11x17 SCALE: NTS

2300MHz RRH (WCS) (2)

22x34 SCALE: 1 1/2" = 1'-0" | 11x17 SCALE: 3/4" = 1'-0"

2300MHz RRH	
MANUFACTURER	ALCATEL-LUCENT
MODEL	RRH4x25-WCS
HEIGHT	31.5"
WIDTH	12.0"
DEPTH	8.7"
WEIGHT	70 LBS

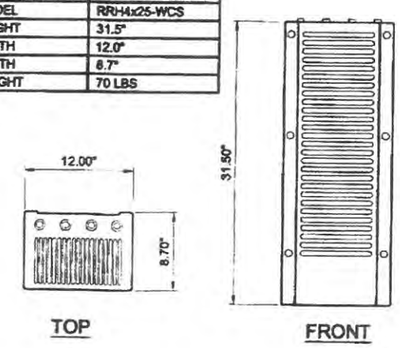

NOT USED (1)

22x34 SCALE: NTS | 11x17 SCALE: NTS

at&t
Your world. Delivered.

PLANS PREPARED BY:

CORNERSTONE ENGINEERING, INC
16925 WOODINVILLE-REDMOND RD NE, SUITE 210
WOODINVILLE, WA 98072
PHONE: 425.487.1732
EMAIL: cei@cornerstone-engr.com
WWW.CORNERSTONE-ENGR.COM

PROJECT INFO:

YA01

SELAH

2.3 MILES SOUTHEAST CRUSHER CANYON
SELAH, WA 98942
YAKIMA COUNTY

ISSUED FOR:

CONSTRUCTION

REV:	DATE:	ISSUED FOR:	BY:
5	03-25-16	REVIEW COMMENTS	AJB
4	02-29-16	PER COMMENTS	LJS
3	02-01-16	FINAL, PER CITY COMMENTS	LJS
2	01-18-16	FINAL, PER CLIENT REVISION	DRA

DRAWN BY:	CHK.:	APV.:
JRF	MWO	MWO

CURRENT ISSUE DATE:
03-25-16

LICENSURE:

MARK WESLEY OLSON
STATE OF WASHINGTON
32204
REGISTERED PROFESSIONAL ENGINEER
3/25/16

JURISDICTIONAL APPROVAL:

PROPRIETARY INFORMATION:

DO NOT SCALE DRAWINGS. CONTRACTOR MUST VERIFY ALL DIMENSIONS AND ADVISE CONSULTANTS OF ANY ERRORS AND OMISSIONS. ALL PREVIOUS ISSUES OF THIS DRAWING ARE SUPERSEDED BY THE LATEST REVISION. THE INFORMATION CONTAINED IN THIS SET OF DOCUMENTS IS PROPRIETARY BY NATURE. ANY USE OR DISCLOSURE OTHER THAN WHICH IS RELATED TO NAMED CLIENT IS STRICTLY PROHIBITED.

DRAWING TITLE:

DETAIL SHEET

DRAWING NUMBER:

A-3 | 5

CEI JOB NUMBER: LTE 3C/4C 14-13046

NOT USED 12
22x34 SCALE: NTS | 11x17 SCALE: NTS

NOT USED 11
22x34 SCALE: NTS | 11x17 SCALE: NTS

GPS ANTENNA 10
22x34 SCALE: NTS | 11x17 SCALE: NTS

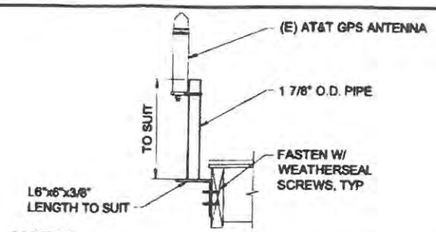

NOTES:

1. LOCATION OF ANTENNA MUST HAVE CLEAR VIEW OF SOUTHERN SKY AND CANNOT HAVE ANY BLOCKAGES EXCEEDING 25% OF THE SURFACE AREA OF A HEMISPHERE AROUND THE GPS ANTENNA.
2. ALL GPS ANTENNA LOCATIONS MUST BE ABLE TO RECEIVE CLEAR SIGNALS FROM A MINIMUM OF FOUR (4) SATELLITES. VERIFY WITH HANDHELD GPS BEFORE FINAL LOCATION OF GPS ANTENNA.
3. PROPOSED GPS MOUNTED A MINIMUM OF 10' FROM ANY TRANSMITTING ANTENNAS.
4. CEQ.11891 LUCENT, 408762045, KS24535L10, 1:2 GPS SPLITTER, ASSEMBLY TO BE USED FOR LTE GPS WHEN (2) NODE-BS ARE USED.

RRH BRACKET 9
22x34 SCALE: NTS | 11x17 SCALE: NTS

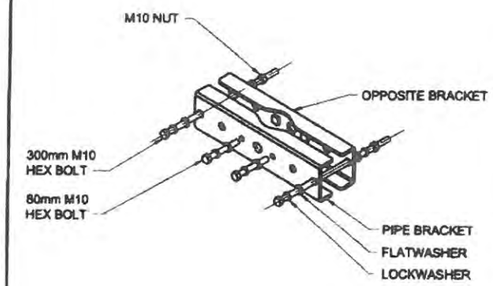

NOT USED 8
22x34 SCALE: NTS | 11x17 SCALE: NTS

NOT USED 7
22x34 SCALE: NTS | 11x17 SCALE: NTS

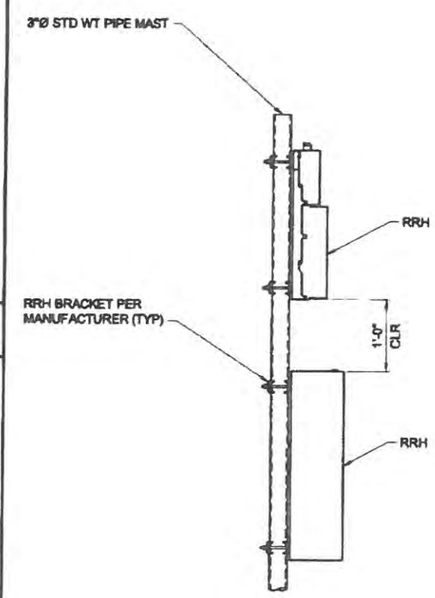

NOT USED 4
22x34 SCALE: NTS | 11x17 SCALE: NTS

NOT USED 3
22x34 SCALE: NTS | 11x17 SCALE: NTS

EQUIPMENT ATTACHMENT 2
22x34 SCALE: 1" = 1'-0" | 11x17 SCALE: 1/2" = 1'-0"

KATHREIN STANDARD MOUNTING KIT		
NO.	PART NAME	QTY
1	FIXED CLAMP	4
2	HEX. CAP BOLT, M8	4
3	SPLIT WASHER, M8	8
4	HEX. NUT, M8	8

NOTE:
ALL CONNECTION COMPONENTS ARE STAINLESS STEEL 304 ASTM A276-304 MATERIAL

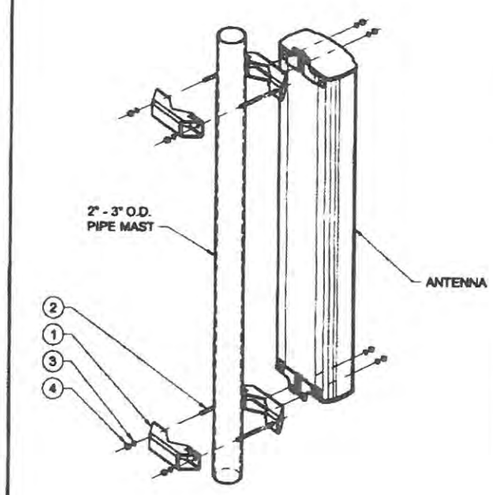

ANTENNA BRACKET 1
22x34 SCALE: NTS | 11x17 SCALE: NTS

at&t
Your world. Delivered.

PLANS PREPARED BY:

CORNERSTONE ENGINEERING, INC
16928 WOODINVILLE-REDMOND RD NE, SUITE 210
WOODINVILLE, WA 98072
PHONE: 425.487.1732
EMAIL: cei@cornerstone-engr.com
WWW.CORNERSTONE-ENGR.COM

PROJECT INFO:

YA01

SELAH

2.3 MILES SOUTHEAST CRUSHER CANYON
SELAH, WA 98942
YAKIMA COUNTY

ISSUED FOR:

CONSTRUCTION

REV:	DATE:	ISSUED FOR:	BY:
5	03-25-16	REVIEW COMMENTS	AJB
4	02-29-16	PER COMMENTS	LJS
3	02-01-16	FINAL, PER CITY COMMENTS	LJS
2	01-18-16	FINAL, PER CLIENT REVISION	DRA

DRAWN BY:	CHK.:	APV.:
JRF	MWO	MWO

CURRENT ISSUE DATE:

03-25-16

LICENSURE:

JURISDICTIONAL APPROVAL:

PROPRIETARY INFORMATION:

DO NOT SCALE DRAWINGS. CONTRACTOR MUST VERIFY ALL DIMENSIONS AND ADVISE CONSULTANTS OF ANY ERRORS AND OMISSIONS. ALL PREVIOUS ISSUES OF THIS DRAWING ARE SUPERSEDED BY THE LATEST REVISION. THE INFORMATION CONTAINED IN THIS SET OF DOCUMENTS IS PROPRIETARY BY NATURE. ANY USE OR DISCLOSURE OTHER THAN WHICH IS RELATED TO NAMED CLIENT IS STRICTLY PROHIBITED.

DRAWING TITLE:

DETAIL SHEET

DRAWING NUMBER:

A-3.1 | 5

CEI JOB NUMBER: LTE 3C/4C 14-13046

PROPOSED ANTENNA CONFIGURATION AND SCHEDULE - PER RFDS REV 3.0 - DATED 03-27-15

SECTOR X	AZIMUTH	RAD CENTER	QTY	VENDOR	MODEL	ELEC. TILT	MECH. TILT	RET	TMA	RRH QTY	# OF FEEDERS	FEEDER TYPE	FEEDER LENGTH	PLACEMENT	DIPLEXED
LTE AWS	150°	93'-0"	1	KATHREIN	80010965	5°	0°	YES	-	2 (E)	(N)	FIBER	±150'	CABLE LADDER	NO
LTE 700						5°			-						
LTE AWS						5°			-						
GSM 1900	150°	93'-0"	1	KATHREIN	80010965	0°	0°	YES	-	-	2 (N)	1 5/8"Ø	±140'	CABLE LADDER	YES
GSM 850						0°			E15D91P13						
UMTS 1900	150°	93'-0"	1	KATHREIN	80010965	0°	1°	YES	-	-	2 (N)	1 5/8"Ø	±140'	CABLE LADDER	YES
UMTS 850						10°			E15D91P13						
LTE WCS	150°	93'-0"	1	KATHREIN	80010965	5°	2°	YES	-	2 (N)	(N)	FIBER	±150'	CABLE LADDER	NO
LTE 850						5°			-						
LTE WCS						5°			-						

SECTOR Y	AZIMUTH	RAD CENTER	QTY	VENDOR	MODEL	ELEC. TILT	MECH. TILT	RET	TMA	RRH QTY	# OF FEEDERS	FEEDER TYPE	FEEDER LENGTH	PLACEMENT	DIPLEXED
LTE AWS	285°	93'-0"	1	KATHREIN	80010965	2°	0°	YES	-	2 (E)	(N)	FIBER	±150'	CABLE LADDER	NO
LTE 700						0°			-						
LTE AWS						2°			-						
GSM 1900	285°	93'-0"	1	KATHREIN	80010965	0°	0°	YES	-	-	2 (N)	1 5/8"Ø	±140'	CABLE LADDER	YES
GSM 850						10°			E15D91P13						
UMTS 1900	285°	93'-0"	1	KATHREIN	80010965	4°	0°	YES	-	-	2 (N)	1 5/8"Ø	±140'	CABLE LADDER	YES
UMTS 850						10°			E15D91P13						
LTE WCS	285°	93'-0"	1	KATHREIN	80010965	2°	0°	YES	-	2 (N)	(N)	FIBER	±150'	CABLE LADDER	NO
LTE 850						0°			-						
LTE WCS						2°			-						

SECTOR Z	AZIMUTH	RAD CENTER	QTY	VENDOR	MODEL	ELEC. TILT	MECH. TILT	RET	TMA	RRH QTY	# OF FEEDERS	FEEDER TYPE	FEEDER LENGTH	PLACEMENT	DIPLEXED
LTE AWS	50°	93'-0"	1	KATHREIN	80010965	5°	0°	YES	-	2 (E)	(N)	FIBER	±150'	CABLE LADDER	NO
LTE 700						5°			-						
LTE AWS						5°			-						
GSM 1900	50°	93'-0"	1	KATHREIN	80010965	0°	0°	YES	-	-	2 (N)	1 5/8"Ø	±140'	CABLE LADDER	YES
GSM 850						0°			E15D91P13						
UMTS 1900	50°	93'-0"	1	KATHREIN	80010965	4°	2°	YES	-	-	2 (N)	1 5/8"Ø	±140'	CABLE LADDER	YES
UMTS 850						10°			E15D91P13						
LTE WCS	50°	93'-0"	1	KATHREIN	80010965	5°	0°	YES	-	2 (N)	(N)	FIBER	±150'	CABLE LADDER	NO
LTE 850						5°			-						
LTE WCS						5°			-						

EXISTING ANTENNA CONFIGURATION AND SCHEDULE - PER RFDS REV 3.0 - DATED 03-27-15

SECTOR X	AZIMUTH	RAD CENTER	QTY	VENDOR	MODEL	ELEC. TILT	MECH. TILT	RET	TMA	RRH QTY	# OF FEEDERS	FEEDER TYPE	FEEDER LENGTH	PLACEMENT	DIPLEXED
GSM 1900	150°	±100'-0"	1	KATHREIN	742-265	6°	0°	YES	-	-	4 (E)	1 5/8"Ø	±125'	(E) CABLE LADDER	NO
GSM 850						8°			TT19-065P111-001						
LTE 700/AWS	150°	±85'-0"	1	KMW	AM-X-CD-16-65-00T	2°	6°	YES	-	2 (E)	(E)	FIBER	±100'	(E) CABLE LADDER	NO
LTE 700/AWS						2°			-						
UMTS 1900	150°	100'-0"	1	KATHREIN	742-265	6°	1°	YES	-	-	2 (E)	1 5/8"Ø	±125'	(E) CABLE LADDER	YES
UMTS 850						10°			TT19-065P111-001						

SECTOR Y	AZIMUTH	RAD CENTER	QTY	VENDOR	MODEL	ELEC. TILT	MECH. TILT	RET	TMA	RRH QTY	# OF FEEDERS	FEEDER TYPE	FEEDER LENGTH	PLACEMENT	DIPLEXED
GSM 1900	285°	±100'-0"	1	KATHREIN	742-265	8°	0°	YES	-	-	4 (E)	1 5/8"Ø	±125'	(E) CABLE LADDER	NO
GSM 850						10°			TT19-065P111-001						
LTE 700/AWS	285°	±85'-0"	1	KMW	AM-X-CD-16-65-00T	2°	0°	YES	-	2 (E)	(E)	FIBER	±100'	(E) CABLE LADDER	NO
LTE 700/AWS						2°			-						
UMTS 1900	285°	100'-0"	1	KATHREIN	742-265	4°	0°	YES	-	-	2 (E)	1 5/8"Ø	±125'	(E) CABLE LADDER	YES
UMTS 850						10°			TT19-065P111-001						

SECTOR Z	AZIMUTH	RAD CENTER	QTY	VENDOR	MODEL	ELEC. TILT	MECH. TILT	RET	TMA	RRH QTY	# OF FEEDERS	FEEDER TYPE	FEEDER LENGTH	PLACEMENT	DIPLEXED
GSM 1900	50°	±100'-0"	1	KATHREIN	742-265	8°	0°	YES	-	-	4 (E)	1 5/8"Ø	±125'	(E) CABLE LADDER	NO
GSM 850						8°			TT19-065P111-001						
LTE 700/AWS	50°	±85'-0"	1	KMW	AM-X-CD-16-65-00T	5°	0°	YES	-	2 (E)	(E)	FIBER	±100'	(E) CABLE LADDER	NO
LTE 700/AWS						5°			-						
UMTS 1900	50°	100'-0"	1	KATHREIN	742-265	4°	2°	YES	-	-	2 (E)	1 5/8"Ø	±125'	(E) CABLE LADDER	YES
UMTS 850						10°			TT19-065P111-001						

PROPOSED RF SCHEDULE

22x34 SCALE: NTS | 11x17 SCALE: NTS | 4

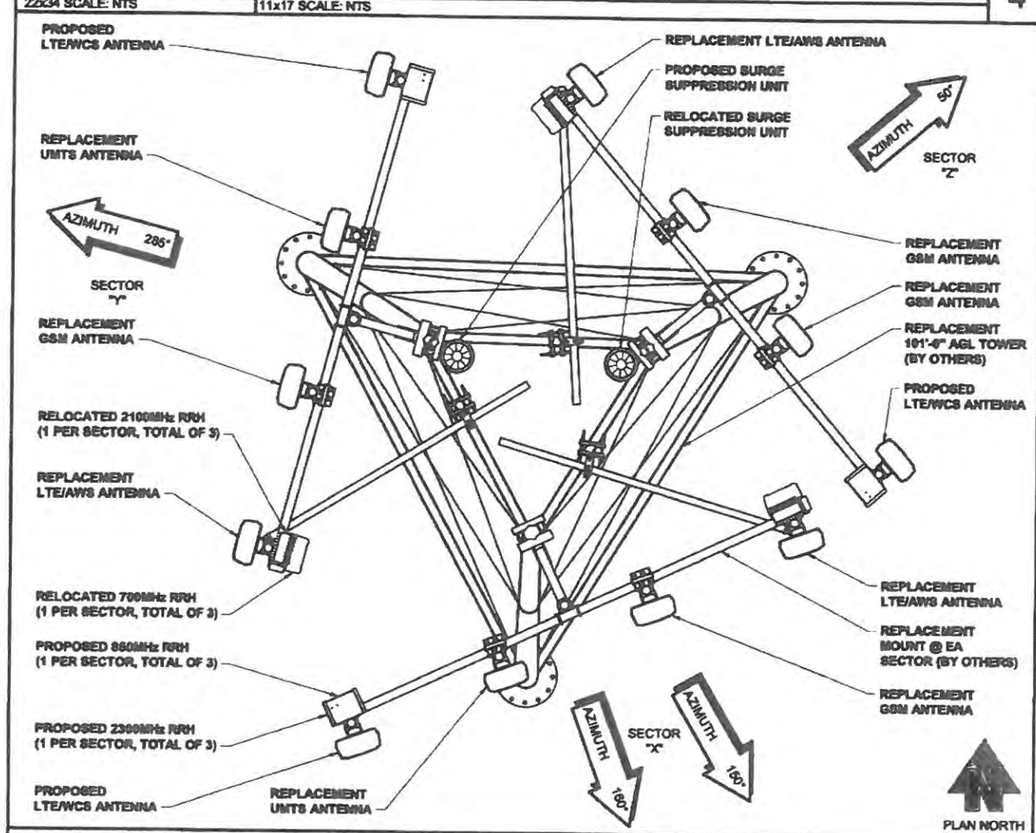

PROPOSED ANTENNA PLAN

22x34 SCALE: 1/2" = 1'-0" | 11x17 SCALE: 1/4" = 1'-0" | 2

EXISTING RF SCHEDULE

22x34 SCALE: NTS | 11x17 SCALE: NTS | 3

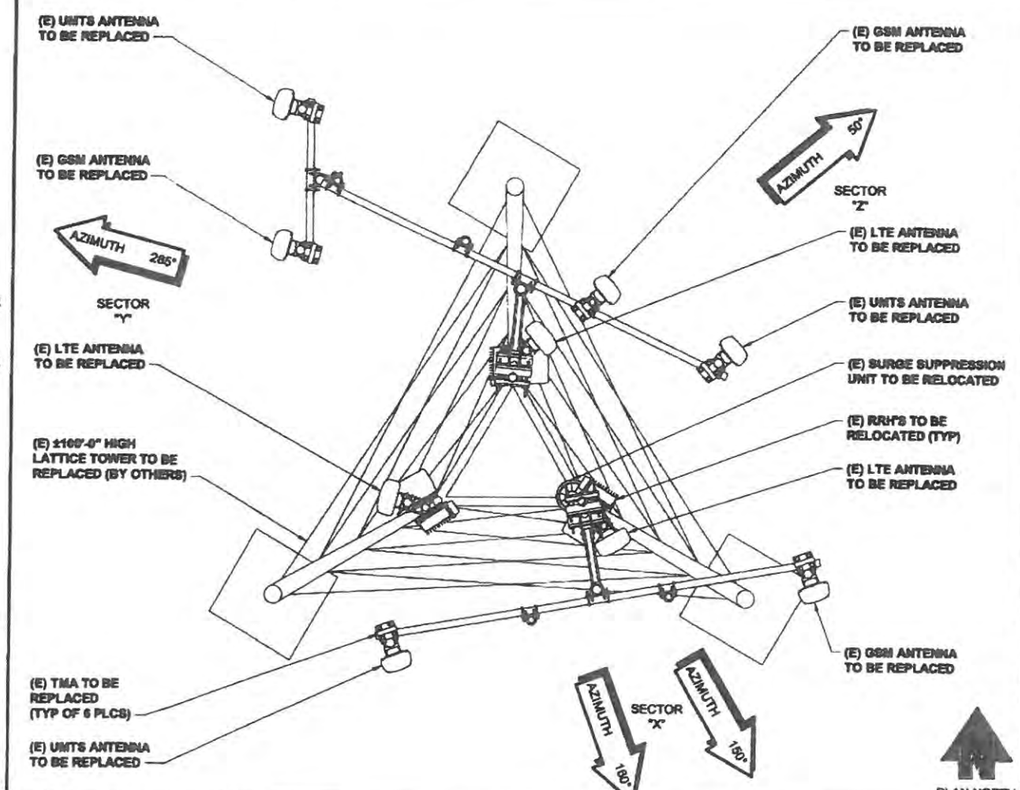

EXISTING ANTENNA PLAN

22x34 SCALE: 1/2" = 1'-0" | 11x17 SCALE: 1/4" = 1'-0" | 1

at&t Your world. Delivered.

PLANS PREPARED BY:

CORNERSTONE ENGINEERING, INC.
16928 WOODINVILLE-REDMOND RD NE, SUITE 210
WOODINVILLE, WA 98072
PHONE: 425.487.1732
EMAIL: cei@cornerstone-engr.com
WWW.CORNERSTONE-ENGR.COM

PROJECT INFO:

YA01

SELAH

2.3 MILES SOUTHEAST CRUSHER CANYON
SELAH, WA 98942
YAKIMA COUNTY

ISSUED FOR:

CONSTRUCTION

REV:	DATE:	ISSUED FOR:	BY:
5	03-25-16	REVIEW COMMENTS	AJB
4	02-29-16	PER COMMENTS	LJS
3	02-01-16	FINAL, PER CITY COMMENTS	LJS
2	01-18-16	FINAL, PER CLIENT REVISION	DRA

DRAWN BY:	CHK.:	APV.:
JRF	MWO	MWO

CURRENT ISSUE DATE:

03-25-16

LICENSURE:

MARK WESLEY OLSON — STATE OF WASHINGTON — REGISTERED PROFESSIONAL ENGINEER
3/25/16

JURISDICTIONAL APPROVAL:

PROPRIETARY INFORMATION:

DO NOT SCALE DRAWINGS. CONTRACTOR MUST VERIFY ALL DIMENSIONS AND ADVISE CONSULTANTS OF ANY ERRORS AND OMISSIONS. ALL PREVIOUS ISSUES OF THIS DRAWING ARE SUPERSEDED BY THE LATEST REVISION. THE INFORMATION CONTAINED IN THIS SET OF DOCUMENTS IS PROPRIETARY BY NATURE. ANY USE OR DISCLOSURE OTHER THAN WHICH IS RELATED TO NAMED CLIENT IS STRICTLY PROHIBITED.

DRAWING TITLE:

EXISTING & PROPOSED ANTENNA PLANS

DRAWING NUMBER:

RF-1 | 5

CEI JOB NUMBER: LTE 3C/4C 14-13046

NOT USED
22x34 SCALE: NTS | 11x17 SCALE: NTS

12

NOT USED
22x34 SCALE: NTS | 11x17 SCALE: NTS

11

GROUND LUG CONNECTION
22x34 SCALE: NTS | 11x17 SCALE: NTS

9

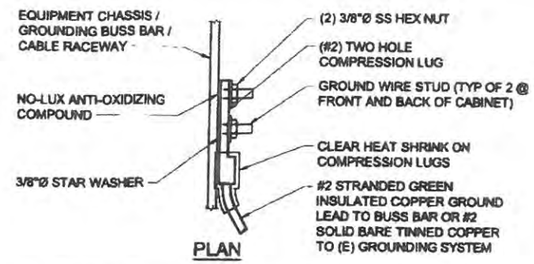

NOTE:
FOR GROUNDING CONNECTIONS TO PAINTED CABINETS CHASSIS, GRIND OFF ALL ENAMEL COATINGS TO BARE METAL AT LUG CONTACT AREA PRIOR TO MAKING BOLTED LUG CONNECTION. APPLY NO-LUX TO ALL EXPOSED BARE METAL.

HYLUG CONNECTOR INSTALLATION INSTRUCTIONS:

1. SELECT PROPER HYLUG FOR THE WIRE SIZE USED.
2. STRIP CABLE OF INSULATION TO A LENGTH EQUAL TO THE BARREL OF THE CONNECTOR.
3. INSERT CABLE FULLY INTO CONNECTOR.
4. APPLY THE PROPER NUMBER OF CRIMPS AS SHOWN BY NUMBER OF COLORED BANDS.
5. CRIMP FROM TONGUE END OF CONNECTOR TOWARD CABLES FOR TERMINALS AND CENTER SPLICE TOWARD CABLE FOR BUTT SPLICES REQUIRING MORE THAN ONE CRIMP PER END.

HYLUG TYPE YGA CONNECTOR IS PRE-FILLED WITH PENETROX COMPOUND AND STRIP SEALED.

BURNDY HYDRAULIC DIE SET #U1CRT-1/U11T.

GROUND BUSS BAR
22x34 SCALE: NTS | 11x17 SCALE: NTS

7

GROUND BAR ATTACHMENT:

CONCRETE SUBSTRATE:	(4) 3/8"Ø HILTI TZ EXPANSION ANCHORS WITH 2" MINIMUM EMBEDMENT.
WOOD FRAMED SUBSTRATE:	(4) 3/8"Ø LAG SCREWS WITH 2" MINIMUM EMBEDMENT (ADD BLOCKING IF NECESSARY.
SOLID CMU WALL:	(4) 3/8"Ø HILTI TZ EXPANSION ANCHORS WITH 2" MINIMUM EMBEDMENT.
HOLLOW CMU WALL:	(4) 3/8"Ø HILTI HIT HY-20 WITH HIT-A STANDARD RODS. (3 3/8" EMBEDMENT)

NOTE:
COAT ALL MECHANICAL CONNECTIONS W/ "NO-LUX" OR APPROVED EQUAL

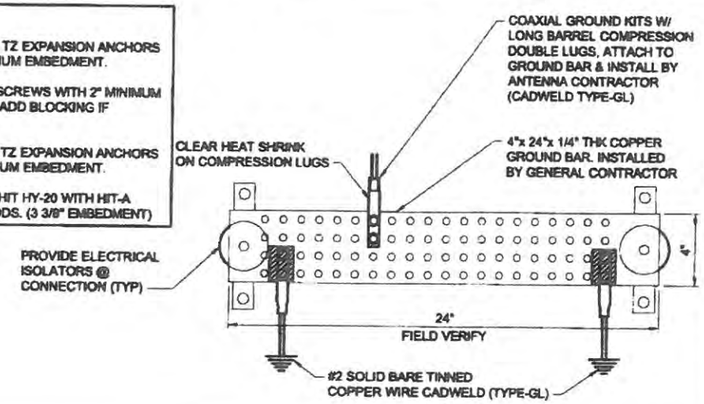

NOT USED
22x34 SCALE: NTS | 11x17 SCALE: NTS

6

NOT USED
22x34 SCALE: NTS | 11x17 SCALE: NTS

5

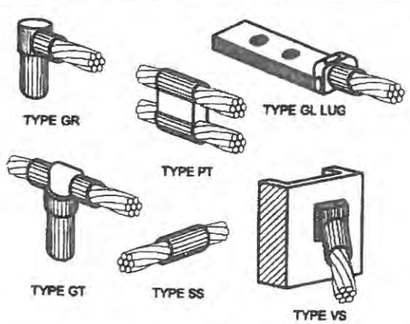

NOTE:
CADWELD "TYPES" SHOWN ABOVE ARE EXAMPLES - CONSULT WITH PROJECT MANAGER FOR SPECIFIC TYPES OF CADWELDS TO BE USED FOR THIS PROJECT.

CADWELD DETAIL
22x34 SCALE: NTS | 11x17 SCALE: NTS

4

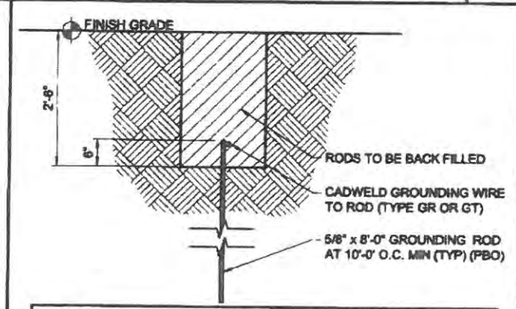

NOTE
ELECTRICAL CONTRACTOR SHALL ORDER INDEPENDENT LAB TEST TO DETERMINE GROUND RESISTANCE AND REPORT TO AT&T REPRESENTATIVE. NOTIFY AT&T IMMEDIATELY IF RESISTANCE EXCEEDS 5 OHMS. ELECT. CONTRACTOR SHALL DETERMINE FROM TEST NUMBER OF RODS REQUIRED. COVER AND WELL ON DWG. 1 IS TYPICAL OF (1) ROD. ALL OTHER RODS REQUIRED ARE TO BE BACK FILLED.

GROUND ROD DETAIL
22x34 SCALE: NTS | 11x17 SCALE: NTS

3

NOT USED
22x34 SCALE: NTS | 11x17 SCALE: NTS

2

NOT USED
22x34 SCALE: NTS | 11x17 SCALE: NTS

1

at&t
Your world. Delivered.

PLANS PREPARED BY:

CORNERSTONE ENGINEERING, INC
16926 WOODINVILLE-REDMOND RD NE, SUITE 210
WOODINVILLE, WA 98072
PHONE: 425.487.1732
EMAIL: ss@cornerstone-engr.com
WWW.CORNERSTONE-ENGR.COM

PROJECT INFO:

YA01

SELAH

2.3 MILES SOUTHEAST CRUSHER CANYON
SELAH, WA 98942
YAKIMA COUNTY

ISSUED FOR:

CONSTRUCTION

REV:	DATE:	ISSUED FOR:	BY:
5	03-25-16	REVIEW COMMENTS	AJB
4	02-29-16	PER COMMENTS	LJS
3	02-01-16	FINAL, PER CITY COMMENTS	LJS
2	01-18-16	FINAL, PER CLIENT REVISION	DRA

DRAWN BY:	CHK.:	APV.:
JRF	MWO	MWO

CURRENT ISSUE DATE:
03-25-16

LICENSURE:

JURISDICTIONAL APPROVAL:

PROPRIETARY INFORMATION:

DO NOT SCALE DRAWINGS. CONTRACTOR MUST VERIFY ALL DIMENSIONS AND ADVISE CONSULTANTS OF ANY ERRORS AND OMISSIONS. ALL PREVIOUS ISSUES OF THIS DRAWING ARE SUPERSEDED BY THE LATEST REVISION. THE INFORMATION CONTAINED IN THIS SET OF DOCUMENTS IS PROPRIETARY BY NATURE. ANY USE OR DISCLOSURE OTHER THAN WHICH IS RELATED TO NAMED CLIENT IS STRICTLY PROHIBITED.

DRAWING TITLE:

GROUNDING DETAILS

DRAWING NUMBER:

E-1.1 | 5

CEI JOB NUMBER: LTE 3C/4C 14-13046

TOWER DESIGN LOADS:

OPTION #1 - PROPOSED TOWER WITH
- PROPOSED ANTENNAS
- ANALYSIS PER TIA-222-G
- 85 MPH WIND & NO ICE
- 40 MPH WIND & 1/4" ICE
- STRUCTURAL CLASS III
- EXPOSURE CATEGORY C
- TOPOGRAHIC CATEGORY 3
- CREST HEIGHT 686' FT
- YAKIMA COUNTY, WA

SITE INFORMATION:

- LATITUDE: 46° 37' 50.21" N
- LONGITUDE: 120° 32' 05.96" W

- LOOKOUT POINT RD
  SELAH, WA 98942

ERIC J. HEINE
STATE OF WASHINGTON
40161
REGISTERED
PROFESSIONAL ENGINEER
8/4/15

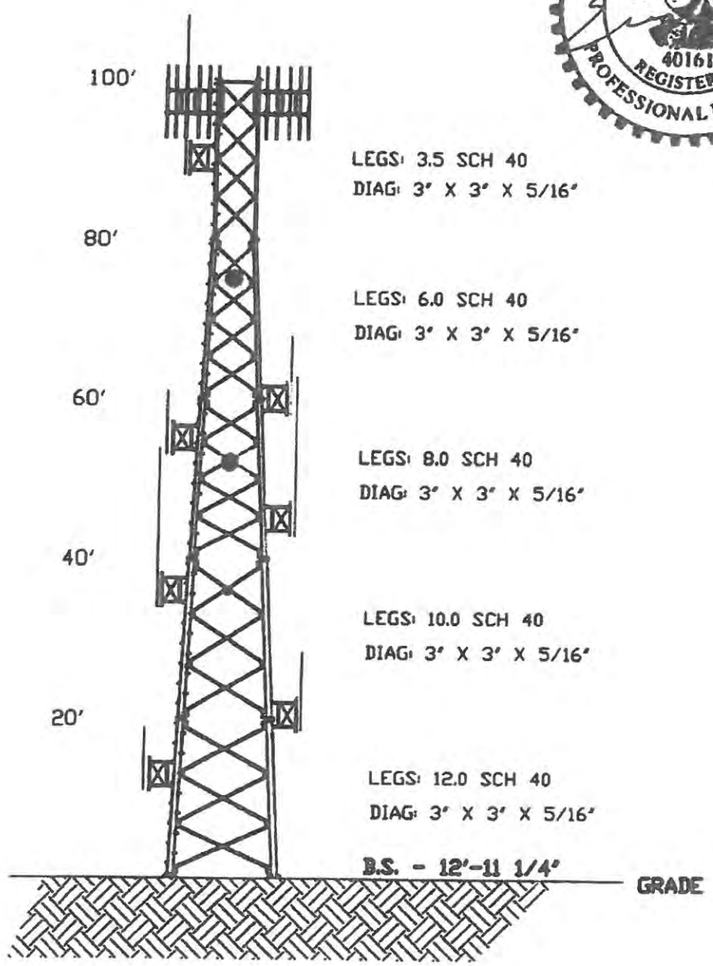

ELEV.	ITEM	RAD.	AZ.	LINE
100'	(3) 3' SIDEARMS	—	—	—
100'	3" X 18' OMNI ANTENNA	—	—	1/2"
100'	3" X 6' OMNI ANTENNA	—	—	1/2"
100'	2" X 2' OMNI ANTENAA	—	—	1/4"
97'	(3) 14' EEI T-FRAMES	—	—	
97'	(18) 9442 RRH	—	—	
97'	(3) DC6-48 60-18-8F	—	—	(24x) 1 5/8"
97'	(12) TT08-19DB111-001 TMA	—	—	
97'	(15) BSA-M65-19R010-02	—	—	
97'	2" X 10' OMNI ANTENNA	—	—	1 5/8"
97'	3" X 18' OMNI ANTENNA	—	—	1 5/8"
95'	(2) 3' SIDEARMS	—	—	—
95'	3" X 18' OMNI ANTENNA	—	—	1 5/8"
95'	2" X 10' OMNI ANTENNA	—	—	1 5/8"
90'	3' SIDEARM	—	—	—
90'	20' 4-BAY DIPOLE	—	—	1/2"
75'	2' DISH	YES	—	1/4"
60'	3' SIDEARM	—	—	—
60'	1' X 1' X 6' TMA	—	—	—
60'	2' X 6' X 3' PANEL ANTENNA	—	—	1/4"
56'	3' SIDEARM	—	—	—
56'	8' X 1' X 6' PANEL	—	—	1/4"
55'	3' SIDEARM	—	—	—
55'	1' X 4" X 2' PANEL ANTENNA	—	—	1/4"
52'	2' DISH	YES	—	1/4"
50'	VHLP1-23	—	—	CAT 5
46'	3' SIDEARM	—	—	—
46'	BMR10	—	—	7/8"
45'	3' SIDEARM	—	—	—
45'	20' 1-BAY DIPOLE	—	—	LMR-400
37'	VHP2-180B-111	—	—	EW180
36'	3' SIDEARM	—	—	—
36'	20' 2-BAY DIPOLE	—	—	1/2"
36'	1' HP DISH	YES	—	1/4"
35'	VHLPX2-18	—	—	CAT 5
26'	HP6-59	YES	—	LMR-400
25'	VHLP4-11	—	—	EW90
21'	3' SIDEARM	—	—	—
21'	1' X 4" PANEL ANTENNA	—	—	1/4"
20'	VHL-P2-18	—	—	EW180, CNT-400
19'	3' SIDEARM	—	—	—
19'	BMR10	—	—	7/8"
16'	VHLPX-4-18	—	—	EW90
13'	3' SIDEARM	—	—	—
13'	2" X 8' OMNI ANTENNA	—	—	1/2"

NOTES:

1. TOWER DESIGNED ACCORDING TO TIA-222-G.
2. ANTENNA LOADS FROM MANUFACTURING SPECIFICATIONS AND ANDREWS BULLETIN 1015F.
3. WELDED CONNECTIONS SHALL CONFORM TO THE LATEST REVISION OF THE AMERICAN WELDING SOCIETY, A.W.S. D 1.1.
4. ALL TOWER MEMBERS SHALL BE HOT-DIP GALVANIZED AFTER FABRICATION. GALVANIZING SHALL CONFORM TO ASTM A123.
5. ALL BOLTS SHALL BE GALVANIZED ACCORDING TO THE STANDARD SPECIFICATION FOR ZINC COATING OF IRON AND STEEL HARDWARE, ASTM A153.
6. BOLTS
   A. BOLTS IN TENSION ASTM A325
   B. STEP BOLTS ASTM A307
7. ALL ITEMS MUST BE INVENTORIED AT THE TIME OF DELIVERY TO THE JOB SITE/STORAGE FACILITY. ANY SHORTAGES REPORTED AFTER THIS DELIVERY WILL BE THE RESPONSIBILITY OF THE CONTRACTOR/OWNER

   ANY PROBLEMS THAT OCCUR WITH SCHEDULING, TRANSPORTATION, DELIVERY, FOUNDATION INSTALLATION, ERECTION OR ANY ITEMS FURNISHED BY EEI MUST BE REPORTED IMMEDIATELY TO ALLOW EEI TIME TO TAKE CORRECTIVE MEASURES. EEI WILL MAKE EVERY EFFORT TO REPAIR/REPLACE NECESSARY ITEMS IN AN EXPEDITED MANNER AND/OR WILL PURSUE CORRECTIVE MEASURES IN THE MOST ECONOMICAL WAY POSSIBLE AT OUR DISCRETION. HOWEVER, UNDER NO CIRCUMSTANCES WILL EEI PAY FOR OR BE RESPONSIBLE FOR ANY DOWN TIME OR EXPENSES INCURRED DUE TO DOWN TIME.
8. TOWER LEGS SHALL BE 50 KSI. ALL OTHER STEEL SHALL BE ASTM A36 MINIMUM.

THESE DRAWINGS AND SPECIFICATIONS ARE THE PROPERTY OF EHRESMANN ENGINEERING, INC. AND SHALL NOT BE REPRODUCED OR USED IN WHOLE OR IN PART AS THE BASIS OF THE MANUFACTURE OR SALE OR ITEM(S) WITHOUT WRITTEN PERMISSION.

SITE: YA01 SELAH, WA

100' EHRESMANN SELF SUPPORTING TOWER

EHRESMANN ENGINEERING, INC.
CONSULTING ENGINEERS
4400 WEST 31st. STREET
YANKTON, SD 57078
(605) 665-7532
(605) 665-9780

DATE: 07/31/15
BY: TR
CHECKED:

JO 94740 | DWG # 94740-C1 | SHT C1 OF

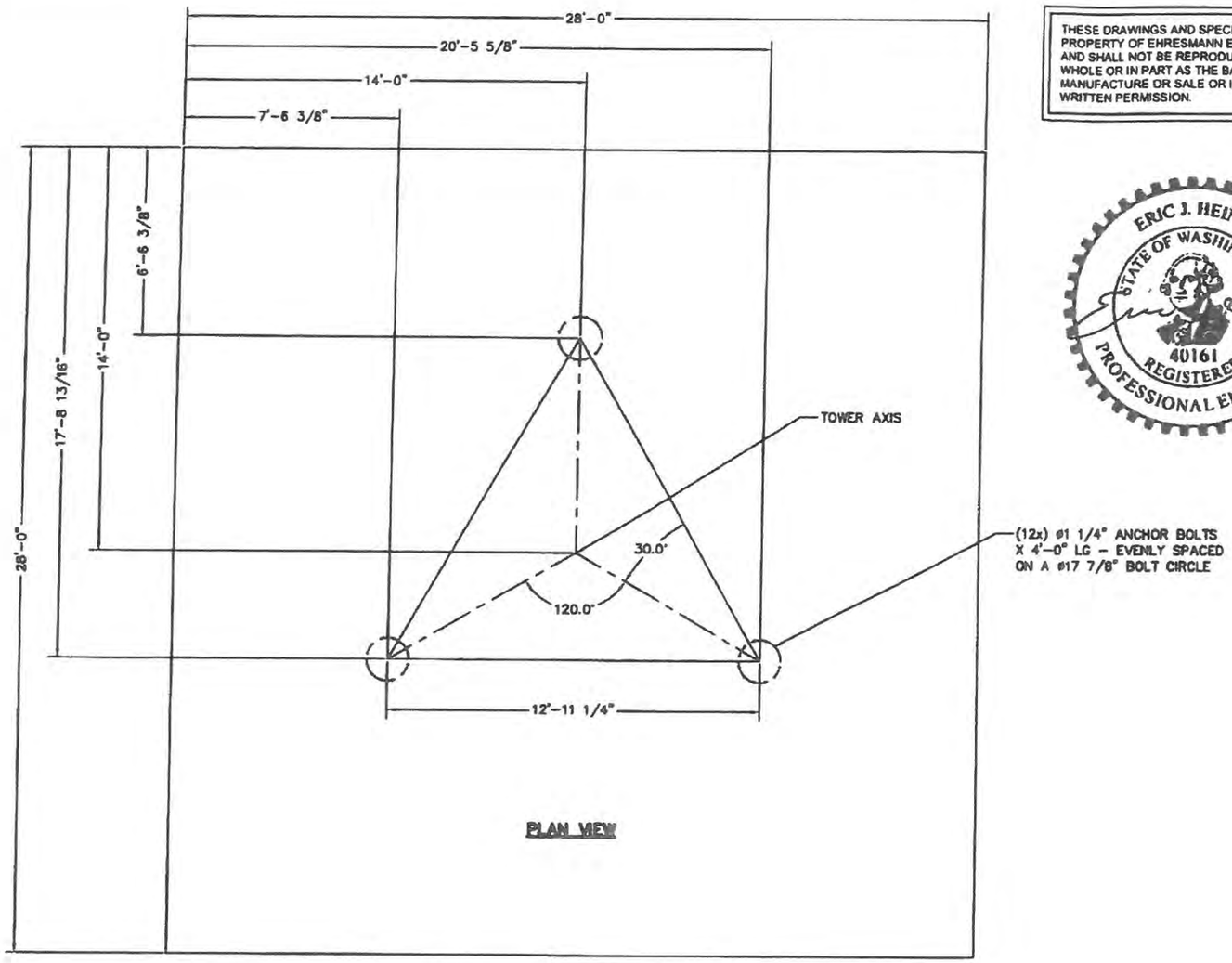

PLAN VIEW

THESE DRAWINGS AND SPECIFICATIONS ARE THE PROPERTY OF EHRESMANN ENGINEERING, INC. AND SHALL NOT BE REPRODUCED OR USED IN WHOLE OR IN PART AS THE BASIS OF THE MANUFACTURE OR SALE OR ITEM(S) WITHOUT WRITTEN PERMISSION.

MATERIAL LIST

ITEM	QTY	GRADE	DESCRIPTION	
A	58	60 KSI	#8 BARS (29x) EACH WAY (TOP)	27'-6"
B	58	60 KSI	#8 BARS (29x) EACH WAY (BOTTOM)	27'-6"
C	56	60 KSI	#6 BARS	6" 3'-2" 6"
D	36	105 KSI	1 1/4"ø 105 KSI 4'-0" LONG AND 12" OF THREAD	4'-0"

QUANTITIES SHOWN ARE FOR ONE (1) SPREAD FOOTING FOUNDATION AS SHOWN.

NOTES:

1.) CONCRETE SHALL ATTAIN ULTIMATE COMPRESSION STRENGTH OF 4000 PSI AT 28 DAYS.
2.) REINFORCING STEEL SHALL CONFORM TO ASTM A615 GRADE SPECIFICATIONS.
3.) 3" MINIMUM CONCRETE COVER ON ALL REINFORCING STEEL.
4.) SIDES OF EXCAVATIONS MAY REQUIRE TO BE BRACED OR SLOPED BACK AS REQUIRED FOR STABILITY AND IN ACCORDANCE WITH ALL APPLICABLE SAFETY REGULATIONS.
5.) DESIGN BASED ON SOILS REPORT BY MORRISON HERSHFIELD CORPORATION; DATED APRIL 1, 2013; PROJECT NO. 10623-A SELAH. CONTRACTOR TO REVIEW SOILS REPORT FOR POSSIBLE SPECIAL INSTRUCTIONS BY GEOTECHNICAL ENGINEERS.
6.) REINFORCING STEEL MEMBERS ARE TO BE EVENLY SPACED.
7.) STEEL AND CONCRETE QUANTITIES SHOWN ARE TOTAL FOR ONE SPREAD FOUNDATION AS SHOWN.
8.) IT IS THE CONTRACTOR'S RESPONSIBILITY TO INSURE THAT ALL PRACTICES AND PROCEDURES UTILIZED DURING WORK REQUIRED ON THE FOUNDATION DO NOT ENDANGER THE SAFETY OF ANY PERSONNEL NOT THE STRUCTURAL INTEGRITY OF THE FOUNDATION.
9.) ALL BACK FILL TO BE PLACED IN 6" LIFTS AND COMPACTED TO ASTM D-1557 STANDARDS.
10.) EXPOSED EDGES OF FOUNDATION TO BE CHAMFERED 1" X 45°.
11.) ACI STANDARDS APPLY TO BENDING REINFORCING STEEL. (ACI 318-LATEST EDITION SECTION 7.2)
12.) USE STEEL TEMPLATES PROVIDED BY EEI FOR PROPER ANCHOR BOLT PLACEMENT.
13.) REFERENCE EEI "TERMS AND CONDITIONS RELATED TO SALES" AND "ANCHOR ROD TIGHTENING" SHEETS FOR ADDITIONAL NOTES.

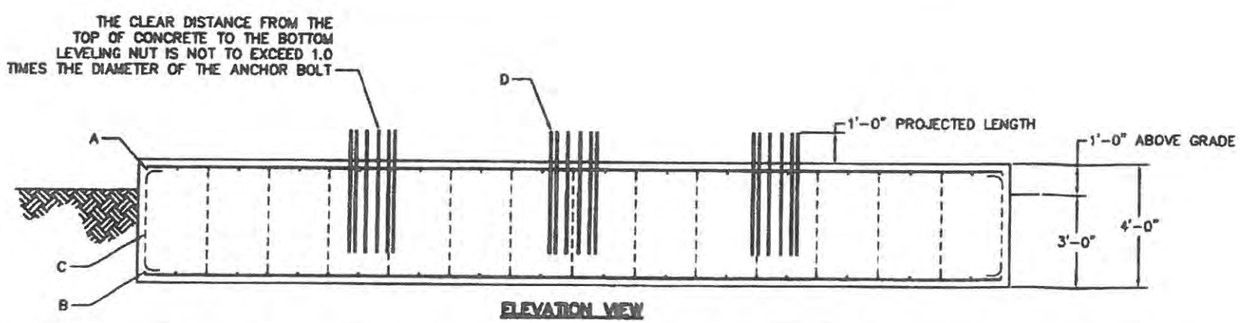

ELEVATION VIEW

DESIGN REACTIONS:

TOTAL SHEAR = 68.641 KIPS
MAX. UPLIFT PER LEG = 352.276 KIPS
MAX. COMP. PER LEG = 382.585 KIPS
OVERTURNING MOMENT = 4168.973 FT KIPS
CONCRETE QTY = 116.15 CU YDS

SITE: YA01 SELAH, WA

SPREAD FOOTING FOUNDATION
100' EEI SSTA

EHRESMANN ENGINEERING, INC.
CONSULTING ENGINEERS
4400 WEST 31st. STREET
YANKTON, SD 57078
(605) 665-7532
(605) 665-9780

DATE: 07/31/15
BY: TR
CHECKED:

J.O. 94740 | DWG # 94740E01 | SHT E01 OF

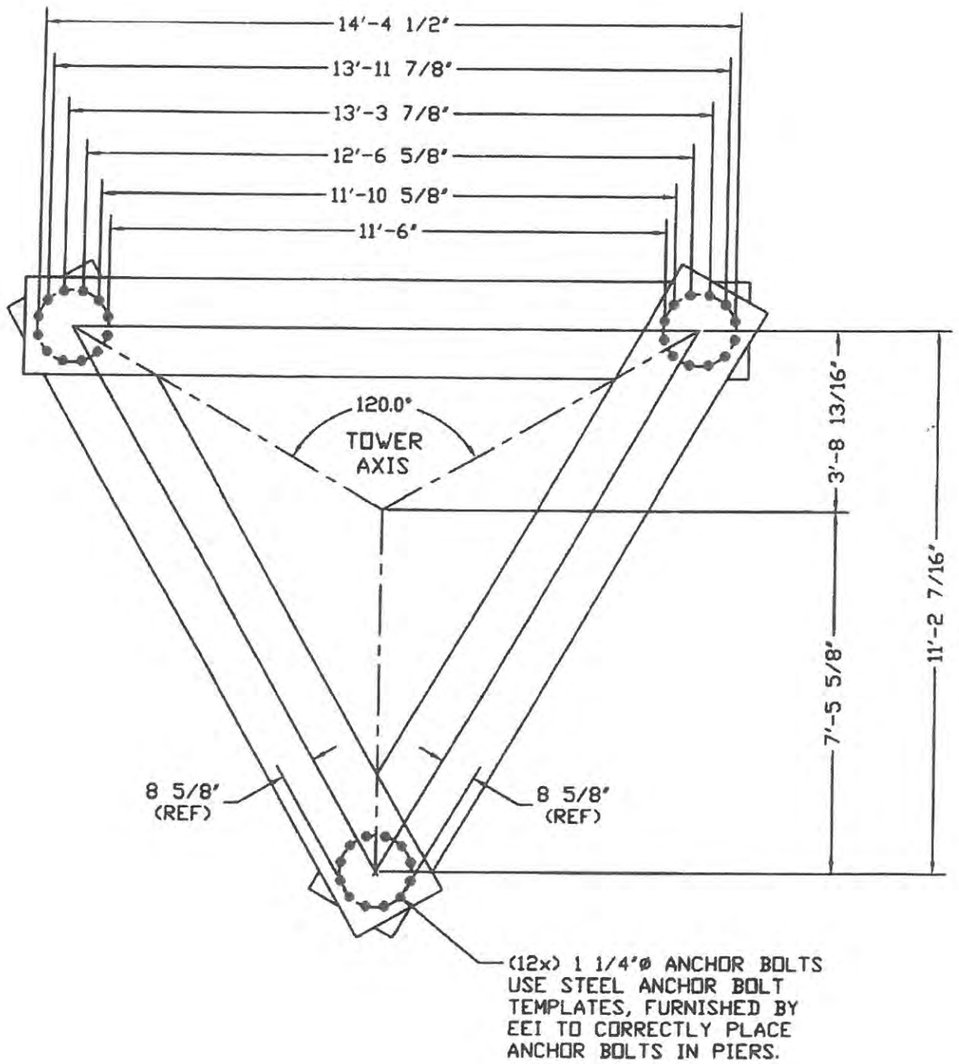

TYPICAL PLAN VIEW ANCHOR BOLTS

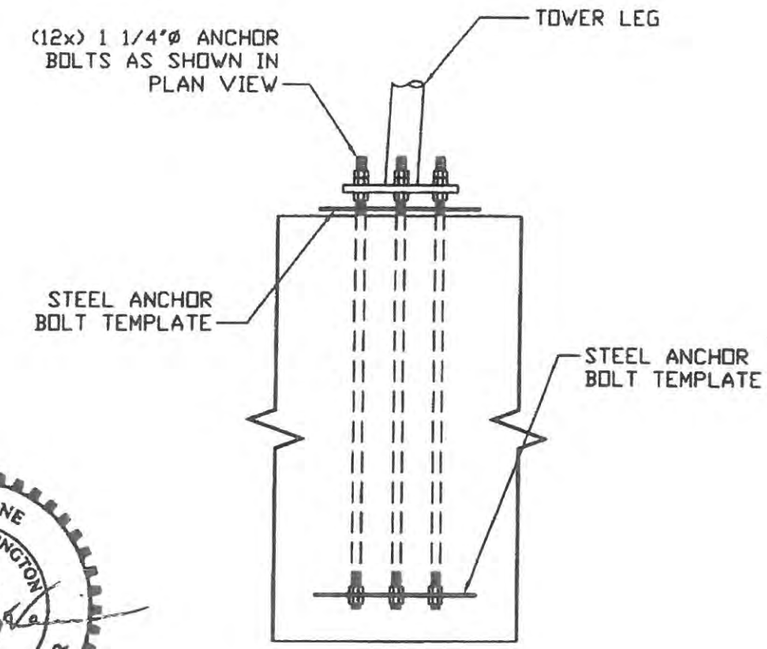

BASE PLATE SETTING

ERIC J. HEINE
STATE OF WASHINGTON
40161
REGISTERED
PROFESSIONAL ENGINEER
8/4/15

NOTES:

1.) SET ANCHOR BOLTS IN TEMPLATE AND EMBED IN FRESH CONCRETE.
2.) AFTER CONCRETE HAS SET REMOVE TOP TEMPLATE.
3.) SET TOWER IN PLACE USING LEVELING NUTS TO PLUMB TOWER.

THESE DRAWINGS AND SPECIFICATIONS ARE THE PROPERTY OF EHRESMANN ENGINEERING, INC. AND SHALL NOT BE REPRODUCED OR USED IN WHOLE OR IN PART AS THE BASIS OF THE MANUFACTURE OR SALE OR ITEM(S) WITHOUT WRITTEN PERMISSION.

SITE: YA01 SELAH, WA

FOUNDATION AND TEMPLATES

EHRESMANN ENGINEERING, INC.
CONSULTING ENGINEERS
4400 WEST 31st. STREET
YANKTON, SD 57078
(605) 665-7532
(605) 665-9780

DATE: 07/31/15
BY: TR
CHECKED:

J.O. 94740 | DWG # 94740E02 | SHT E02 OF

Durant, Thomas

From: Christine Contreras <CContreras@rykaconsulting.com>
Sent: Monday, February 15, 2016 6:55 AM
To: Durant, Thomas; Graziano, Cindy
Cc: Groo, Caprise
Subject: RE: Variance and Building Permit for YA01 LTE 3C
Attachments: FW: AT&T Cell Site YA01 Selah: Proposed Tower Replacement

Hi Thomas,

Please also see the attached email, from our City of Yakima Landlord. It appears the second parcel listed on my application (18131113004) and the plans is the where the existing tower and proposed are located.

Let me know if you have any other questions!

Thank you,

Christine Contreras
RYKA CONSULTING
206.523.1941 Office
425.351.3392 Cell
206.260.7930 Fax
ccontreras@rykaconsulting.com
918 South Horton Street Suite 1002, Seattle, WA 98134
VISIT OUR REVAMPED WEBSITE
www.rykaconsulting.com

From: Christine Contreras
Sent: Friday, February 12, 2016 2:12 PM
To: 'Durant, Thomas'; Graziano, Cindy
Cc: Groo, Caprise
Subject: RE: Variance and Building Permit for YA01 LTE 3C

Hi Thomas,

Please my responses in red below and let me know if this answers all of your questions:

Christine Contreras
RYKA CONSULTING
206.523.1941 Office
425.351.3392 Cell
206.260.7930 Fax
ccontreras@rykaconsulting.com
918 South Horton Street Suite 1002, Seattle, WA 98134
VISIT OUR REVAMPED WEBSITE
www.rykaconsulting.com

EXHIBIT
4

From: Durant, Thomas [mailto:tdurant@ci.selah.wa.us]
Sent: Friday, February 12, 2016 12:30 PM
To: Christine Contreras; Graziano, Cindy
Cc: Groo, Caprise
Subject: RE: Variance and Building Permit for YA01 LTE 3C

Christine:

Your payment was receipted Feb 5, which starts the clock for the steps we have to take in processing the application.

I am doing the review for complete application and have a couple of questions.

County Assessor records show that the Schwerdtfeger Trust sold parcel 181311-13005 to Forbes Mercy on 12/8/2015. My assumption is that the lease and sublease gives your clients the legal right to do this project, which is the reason that neither of the property owners signed the application. But I wanted you to be aware of the change in ownership so that if it has any affect, you can respond to it. What I don't want to have happen is for Mr. Mercy to appear at the hearing and claim that you don't have the right to do this. Also, if you think the Assessor's record is wrong. It is not common, but it happens. AT&T leases tower and ground space from the City of Yakima. The City of Yakima leases the ground space from the underlying property owner and they are working with them right now to execute a new Agreement, to show the new tower location and revise the terms of the Agreement. Our contact with the City of Yakima is Wayne Wantland, Information Technology Manager, with the City of Yakima. His phone number is (509) 575-6048, if you need to speak with him directly as well. AT&T is also working with the City of Yakima to re-paper our existing lease for a new Agreement to account for the new tower location and new terms (leases attached). The City of Yakima has equipment on the current tower, in addition to AT&T's existing equipment. The Amendment currently routing, that has been approved by the City, is to build the new tower in a new location and once construction is complete, AT&T and the City will move their equipment over to the new tower. The old tower will be dismantled in a condition that leaves it reusable, per the request of the City of Yakima. All parties have agreed to the new tower, location, and removing the old tower.

Secondly, we weren't aware that you were going to relocate the new tower on the site. We assume that doing so is necessary to prevent a lapse in service while construction is taking place. Could you confirm that is the case, and that you recognize this action will not give you the authority to locate a new tower at the old tower site? Yes, the reason we are building the new tower in a new location is so that we do not have significant down time. The City of Yakima and AT&T have both Agreed to this.

If you can confirm these items, or let me know if I am misinterpreting the application materials in any way, we can proceed to making the complete application call and schedule the hearing. The next available date for the Planning Commission is Tuesday, March 15 (the commission meets at 5:30 PM). I think that date is achievable for this action. If you deem my answers sufficient, please add AT&T's proposal to the next Planning Commission meeting, on March 15th.

I look forward to hearing from you.

Thomas R Durant
Community Planner

From: Christine Contreras [mailto:CContreras@rykaconsulting.com]
Sent: Friday, February 12, 2016 8:58 AM
To: Graziano, Cindy
Cc: Durant, Thomas; Groo, Caprise
Subject: RE: Variance and Building Permit for YA01 LTE 3C

Great, thank you!

RECORD SURVEY NO. 44-02

S.E. ¼, N.E. ¼, SEC. 11, T.13 N., R.18 E., W.M.

YAKIMA COUNTY, WASHINGTON

2817236

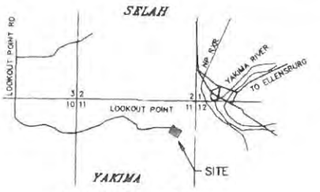

VICINITY MAP

NOT TO SCALE

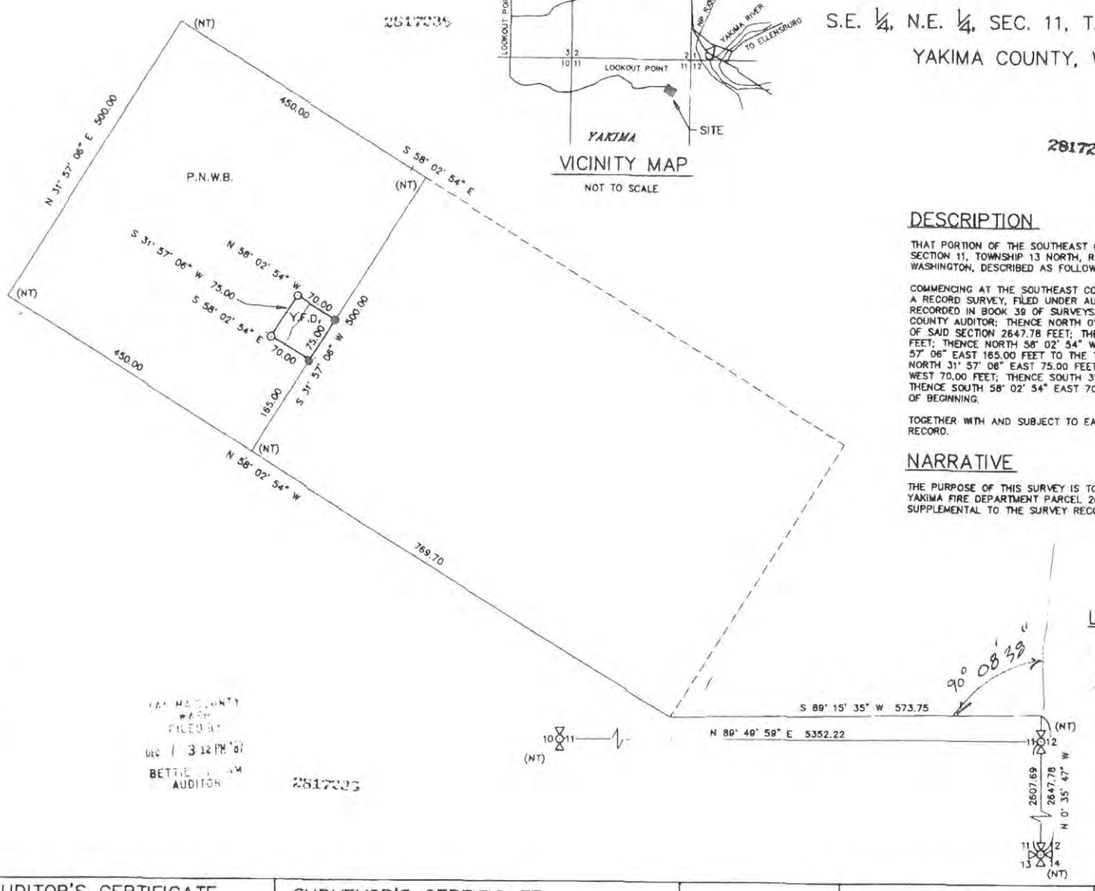

DESCRIPTION

THAT PORTION OF THE SOUTHEAST QUARTER, OF THE NORTHEAST QUARTER, OF SECTION 11, TOWNSHIP 13 NORTH, RANGE 18 EAST, W.M., YAKIMA COUNTY, WASHINGTON, DESCRIBED AS FOLLOWS:

COMMENCING AT THE SOUTHEAST CORNER OF SAID SECTION 11, AS SHOWN ON A RECORD SURVEY, FILED UNDER AUDITORS FILE NUMBER 2752846, AND RECORDED IN BOOK 39 OF SURVEYS, AT PAGE 90, RECORDS OF YAKIMA COUNTY AUDITOR; THENCE NORTH 0° 35' 47" WEST ALONG THE EAST LINE OF SAID SECTION 2647.78 FEET; THENCE SOUTH 89° 15' 35" WEST 573.75 FEET; THENCE NORTH 58° 02' 54" WEST 769.70 FEET; THENCE NORTH 31° 57' 06" EAST 165.00 FEET TO THE TRUE POINT OF BEGINNING; THENCE NORTH 31° 57' 06" EAST 75.00 FEET; THENCE NORTH 58° 02' 54" WEST 70.00 FEET; THENCE SOUTH 31° 57' 06" WEST 75.00 FEET; THENCE SOUTH 58° 02' 54" EAST 70.00 FEET TO THE SAID TRUE POINT OF BEGINNING.

TOGETHER WITH AND SUBJECT TO EASEMENTS, RESERVATIONS AND RESTRICTIONS RECORD.

NARRATIVE

THE PURPOSE OF THIS SURVEY IS TO MOVE THE NORTHWEST LINE OF THE YAKIMA FIRE DEPARTMENT PARCEL 20 FEET TO THE NORTHWEST, AND IS SUPPLEMENTAL TO THE SURVEY RECORDED IN BOOK 39 AT PAGE 90.

LEGEND

● = FOUND 1/2" REBAR LS 14120
○ = SET 1/2" REBAR LS 14120
(NT) = NOT TIED THIS SURVEY

SCALE 1" = 100'

BASIS OF BEARING

R.S. BOOK 39 PG. 90

AUDITOR'S CERTIFICATE

FILED FOR RECORD THIS 7 DAY OF Dec 1987 AT 3:12 MINUTES PAST 3 P.M. AND RECORDED IN VOLUME 44 OF SURVEYS PAGE 2 AT THE REQUEST OF ROBERT H. STRATTON, P.L.S.

YAKIMA COUNTY AUDITOR

INDEX NO.

FEE NO.

SURVEYOR'S CERTIFICATE

I ROBERT H. STRATTON, A LICENSED LAND SURVEYOR IN THE STATE OF WASHINGTON, HEREBY CERTIFY THAT THIS MAP CORRECTLY REPRESENTS AN ACTUAL FIELD SURVEY CONDUCTED UNDER MY DIRECT SUPERVISION IN CONFORMANCE WITH THE SURVEY RECORDING ACT OF 1973, AT THE REQUEST OF YAKIMA FIRE DEPT., AND ALL BEARINGS AND DISTANCES ARE CORRECT.

Robert H. Stratton
ROBERT H. STRATTON LS 14120

3 DEC. 1987
DATE

SURVEY FOR

Y.F.D. & P.N.W.B.

SELAH, WASHINGTON

RE # 329

BOB STRATTON SURVEYING
1350 GRANDRIDGE BLVD SUITE 101A
KENNEWICK, WASHINGTON 99336
(509) 735-7364

DRAWN BY: D.S. JOB # 866
DATE: 12/1/87 SHT. 1 OF 1
YFD.DWG

44-2

EXHIBIT 5

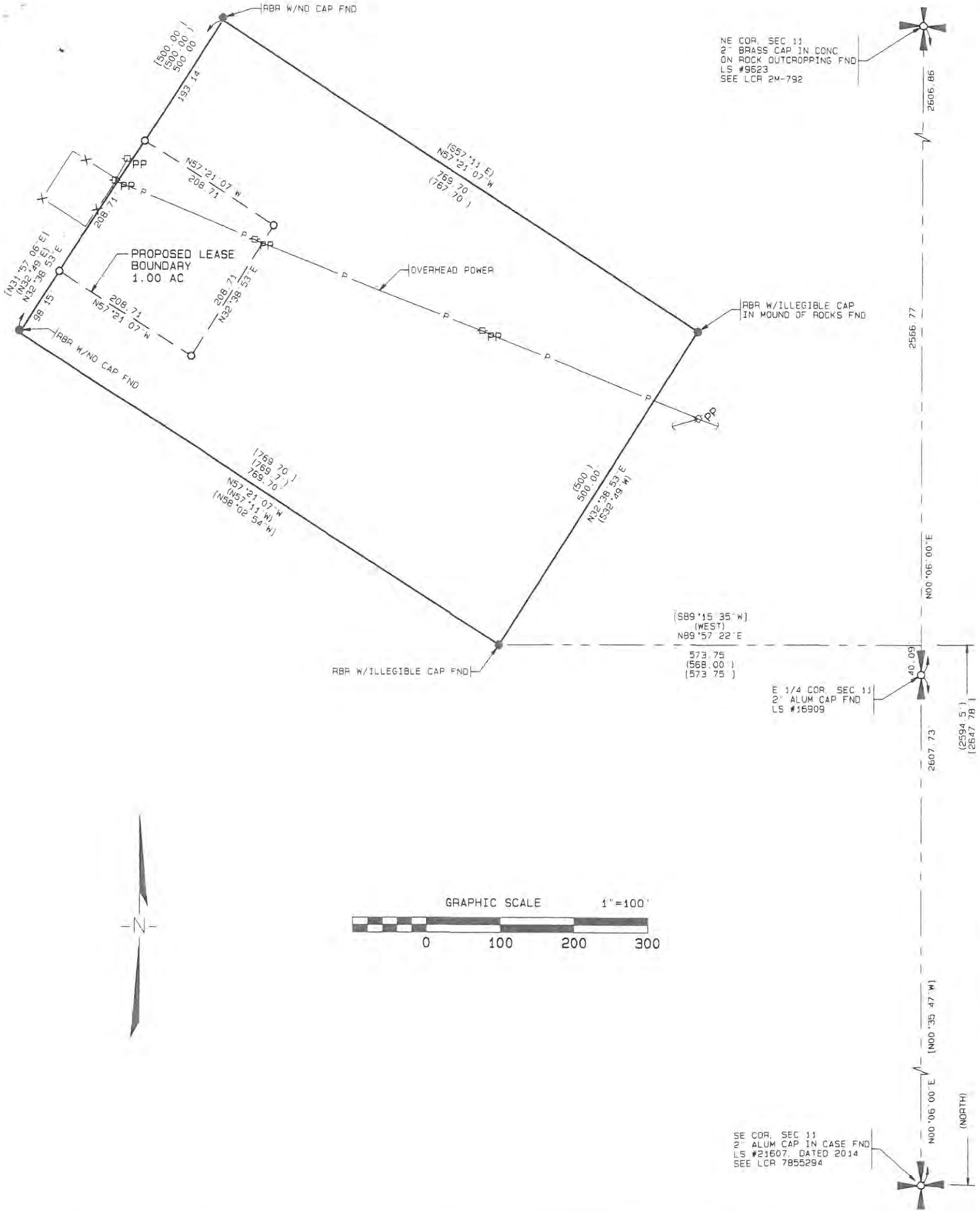

LEGAL DESCRIPTION

THAT PORTION OF SECTION 11, TOWNSHIP 13 NORTH, RANGE 18 EAST, W.M., DESCRIBED AS FOLLOWS:

BEGINNING AT A POINT ON THE EAST LINE OF SAID SECTION 11, 2594.5 FEET NORTH OF THE SOUTHEAST CORNER OF SAID SECTION; THENCE WEST 568.0 FEET TO THE TRUE POINT OF BEGINNING; THENCE NORTH 57°11' WEST, 769.7 FEET; THENCE NORTH 32°49' EAST, 500 FEET; THENCE SOUTH 57°11' EAST, 769.7 FEET; THENCE SOUTH 32°49' WEST, 500 FEET TO THE POINT OF BEGINNING.

NOTES

1. —X— DENOTES EXISTING FENCE
2. ○ DENOTES 1/2" REBAR WITH CAP NUMBER 21607 SET
3. ● DENOTES REBAR FOUND AS NOTED
4. ⊢— DENOTES ANCHOR
5. PP DENOTES POWER POLE
6. ( ) DENOTES BEARING AND/OR DISTANCE FROM LEGAL DESCRIPTION
7. [ ] DENOTES BEARING AND/OR DISTANCE FROM ROS 39-90
8. BOUNDARY PREVIOUSLY SURVEYED AND RECORDED IN BOOK 39 OF SURVEYS, PAGE 90, RECORDS OF YAKIMA COUNTY, WASHINGTON. SEE SAID SURVEY FOR FURTHER INFORMATION.
9. BEARINGS SHOWN ARE ON ASSUMED DATUM RELATIVE TO THE EAST LINE OF THE SOUTHEAST QUARTER OF SECTION 11, TOWNSHIP 13 NORTH, RANGE 18 EAST, W.M. BEING NORTH 0°06'00" EAST.
10. SURVEY PERFORMED WITH A SPECTRA PRECISION SP80 GNSS RECEIVER USING REAL TIME KINEMATIC PROCEDURES. MEASUREMENTS SHOWN HEREON ARE GROUND DISTANCES.
11. MONUMENTS SHOWN HEREON AS FOUND (FND) WERE VISITED IN OCTOBER 2015.
12. THIS SURVEY DOES NOT PURPORT TO SHOW ALL EASEMENTS WHICH MAY ENCUMBER OR BE APPURTENANT TO THE PARCEL SURVEYED.

SURVEYOR'S CERTIFICATE

THIS MAP CORRECTLY REPRESENTS A SURVEY MADE BY ME OR UNDER MY DIRECTION IN CONFORMANCE WITH THE REQUIREMENTS OF THE SURVEY RECORDING ACT AT THE REQUEST OF FORBES MERCY IN OCTOBER 2015.

DONALD H. WILTON
STATE OF WASHINGTON
21607
REGISTERED
PROFESSIONAL LAND SURVEYOR
DHW 12-31-15

AUDITOR'S CERTIFICATE

FILED FOR RECORD THIS 31 DAY OF December 20 15 AT 10:00 A.M. AS SURVEY NUMBER 7896107 AT THE REQUEST OF DON WILTON SURVEYING.

Charles Ross
YAKIMA COUNTY AUDITOR

BY DEPUTY

SUR 7896107

DON WILTON SURVEYING PO BOX 2275 YAKIMA, WA 98907		509-454-8195
BDW DRAWN	BOUNDARY SURVEY FOR FORBES MERCY SELAH, WA	11
OCT 5, 2015 DATE DRAWN		
OCT 2, 2015 SURVEY DATE		
1 OF 1 SHEET		T 13 N, R 18 EWM JOB NO. 15072

WASHINGTON DEPARTMENT OF FISH AND WILDLIFE
PRIORITY HABITATS AND SPECIES REPORT

SOURCE DATASET: PHSPlusPublic
REPORT DATE: 02/12/2016 10.47

Query ID: P160212104708

EXHIBIT 6

Common Name Scientific Name Notes	Site Name Source Dataset Source Record Source Date	Priority Area Occurrence Type More Information (URL) Mgmt Recommendations	Accuracy	Federal Status State Status PHS Listing Status	Sensitive Data Resolution	Source Entity Geometry Type
Shrub-steppe	LOOKOUT POINT PHSREGION 901728	Terrestrial Habitat N/A N/A	1/4 mile (Quarter	N/A N/A PHS LISTED	N AS MAPPED	WA Dept. of Fish and Wildlife Polygons

DISCLAIMER. This report includes information that the Washington Department of Fish and Wildlife (WDFW) maintains in a central computer database. It is not an attempt to provide you with an official agency response as to the impacts of your project on fish and wildlife. This information only documents the location of fish and wildlife resources to the best of our knowledge. It is not a complete inventory and it is important to note that fish and wildlife resources may occur in areas not currently known to WDFW biologists, or in areas for which comprehensive surveys have not been conducted. Site specific surveys are frequently necesssary to rule out the presence of priority resources. Locations of fish and wildlife resources are subject to vraition caused by disturbance, changes in season and weather, and other factors. WDFW does not recommend using reports more than six months old.

WDFW Test Map

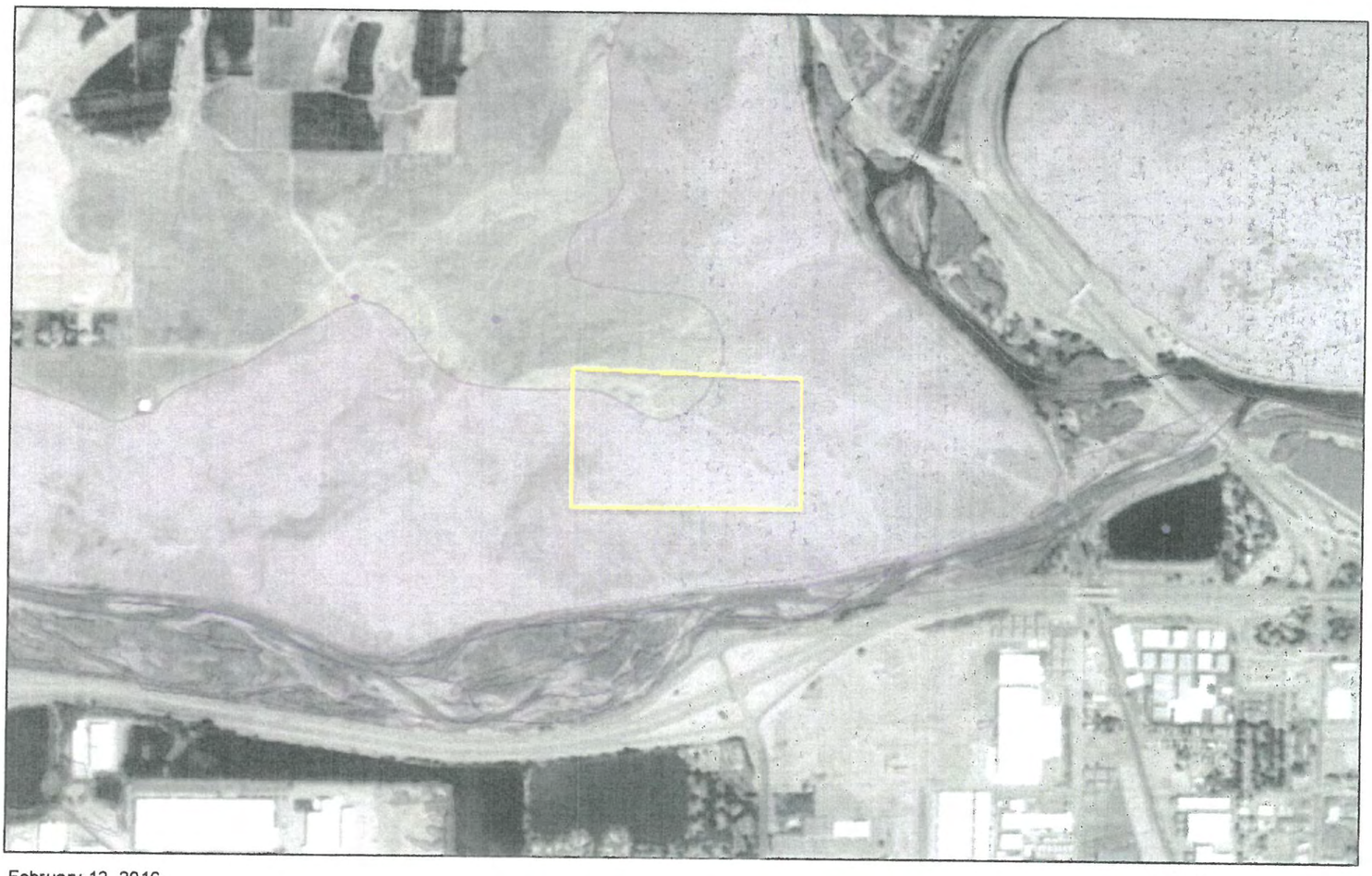

February 12, 2016

PHS Report Clip Area
PT
LN
AS MAPPED
SECTION
QTR-TWP
TOWNSHIP

EXHIBIT
6A

1:19,842

0 0.15 0.3 0.6 mi

0 0.275 0.55 1.1 km

Durant, Thomas

From: Downes, Scott G (DFW) <Scott.Downes@dfw.wa.gov>
Sent: Wednesday, March 02, 2016 4:08 PM
To: Durant, Thomas
Subject: RE: Communication Tower Lookout Point Selah

Thomas,
Forbes Mercy asked a similar question of this area last year, I don't know if this is his application that you are reviewing or not. I'm copying my email response to him from October 9, 2015 below as the same response would pretty much apply to this one.

Thanks for checking.

Scott

Scott Downes
Fish & Wildlife Habitat Biologist
Washington Department of Fish and Wildlife
Region 3 Habitat Program
1701 South 24th Ave
Yakima, WA 98902-5720
Scott.Downes@dfw.wa.gov
Office-509-457-9307
Cell-509-607-3578

****
Mr. Mercy,
We appreciate that you provided us advanced opportunity to review and comment on your proposed radio tower on Lookout Point near Selah Gap. I reviewed our records in that area and while the area is mapped as a shrub-steppe area of concern, it is somewhat isolated from other shrub-steppe habitat and bordered by other development. Thus, I do not believe that your facility is likely to have much additional cumulative impact from what is already there, especially since you are co-locating your tower near existing towers. While parts of this shrub-steppe area have burned in the recent past, it continues to provide habitat for wildlife moving between Selah Gap, the riparian corridors near the streams, and areas further east and west. WDFW would like to see efforts to reduce the overall footprint to the maximum extent possible and minimize fire risk. Perhaps this has already occurred, but if not consider trying to place the tower as near to the other two existing towers as possible to reduce further impacts to habitat.

Spread of invasive weeds and fire issues are a concern. We would like to see management practices (revegetation of disturbed soils using native plant species) applied to reduce the spread of noxious, invasive weeds in this area and fire safety practices to ensure that construction and maintenance of the tower does not lead to increase fire risk for the shrub-steppe surrounding the site.

I'm happy to answer additional questions that you may have.

Thanks,

Scott

EXHIBIT
7

Scott Downes
Fish & Wildlife Habitat Biologist
Washington Department of Fish and Wildlife
Region 3 Habitat Program
1701 South 24th Ave
Yakima, WA 98902-5720
Scott.Downes@dfw.wa.gov
Office-509-457-9307
Cell-509-607-3578

From: Durant, Thomas [mailto:tdurant@ci.selah.wa.us]
Sent: Wednesday, March 02, 2016 11:24 AM
To: Downes, Scott G (DFW)
Subject: Communication Tower Lookout Point Selah

Scott

Eric Bartrand referred me to you. Selah is processing an application to replace an existing 100' communication tower on Lookout Point with a tower of similar height and dimension in the same fenced area but about 50 feet away. It appears to be very near a PHS area labeled shrub-steppe. Do you have any comments or concerns about this?

This is scheduled to go to the Planning Commission in two weeks. I apologize for the short notice, but it is exempt under SEPA as the replacement of an existing communication tower.

If you need more specifics, let me know.

Thank you

Thomas R Durant

Phone: 698-7365, if you call ask for either me or Harmit Bedi.

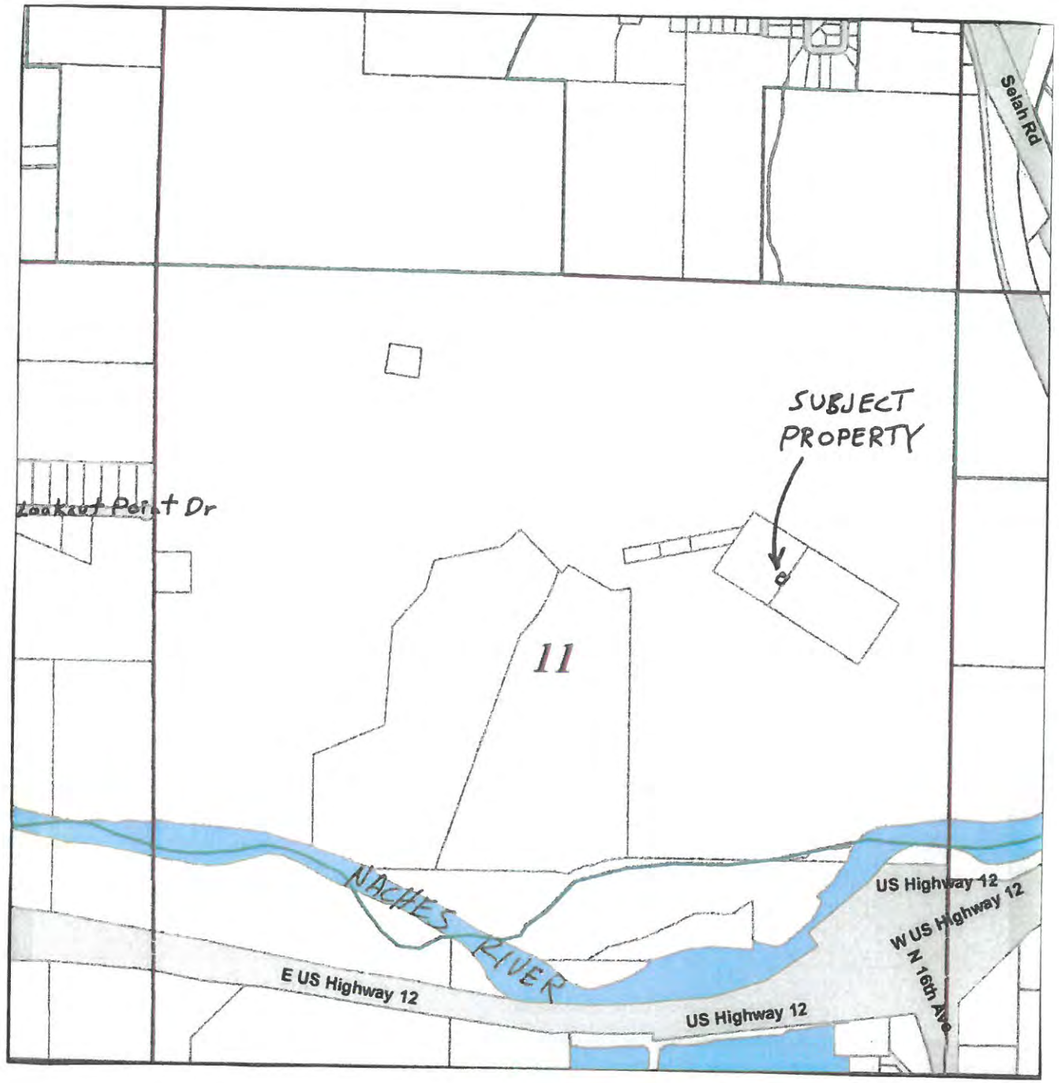

SUBJECT PROPERTY SCALE: 1" = 1,000'

APPLICATION: Height Variance for Communication Tower

APPLICANT: NEW CINGULAR WIRELESS/AT&T MOBILITY/ RYKA

EXHIBIT
tabbies
8

Yakima County GIS - Washington

Land Information Portal

[Print Map]
[Close Map]

Yakimap.com

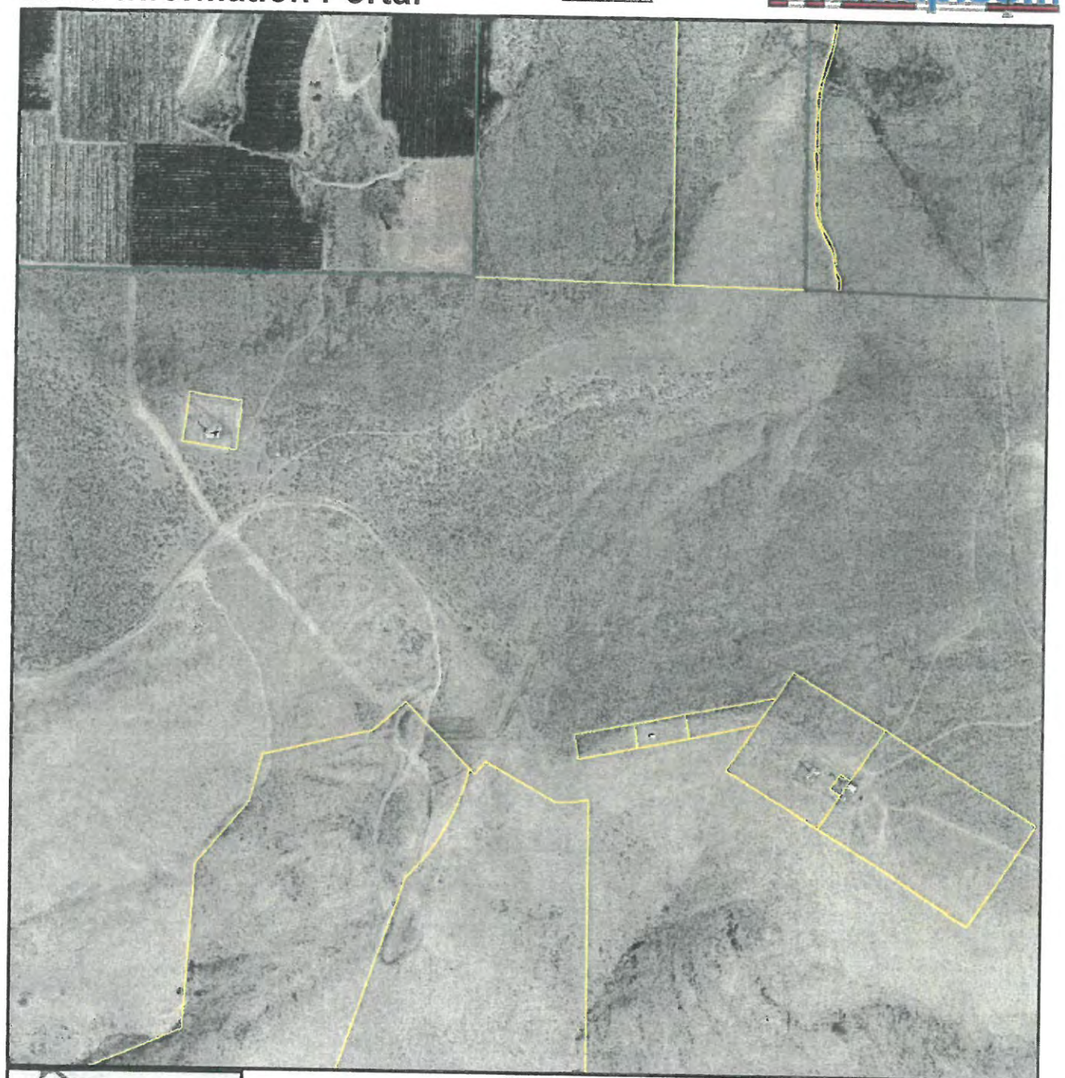

Map Center: **Range:18 Township:13 Section:11**

2015 Ortho Photography

City Limits
Sections

WWW.YAKIMAP.COM
Yakima County GIS
128 N 2nd Street
Yakima, WA 98901
(509)574-2992

One Inch = 600 Feet

Feet 250 500 750 1000

MAP AND PARCEL DATA ARE BELIEVED TO BE ACCURATE, BUT ACCURACY IS NOT GUARANTEED; THIS IS NOT A LEGAL DOCUMENT AND SHOULD NOT BE SUBSTITUTED FOR A TITLE SEARCH, APPRAISAL, SURVEY, FLOODPLAIN OR ZONING VERIFICATION

Copyright (C) Yakima County GIS

EXHIBIT
9

NOTICE OF DEVELOPMENT APPLICATION
OPPORTUNITY TO PROVIDE COMMENTS
NOTICE OF PLANNING COMMISSION OPEN RECORD
PUBLIC HEARING

File No. 915.95.16-01 – New Cingular Wireless PCS, LLC / AT&T Mobility / Ryka Consulting Notice of Application.

Application: On February 5, 2016 the City of Selah Planning Department received a Variance application for a communication tower in the One-Family Residential (R-1) zone from New Cingular Wireless PCS, LLC / AT&T Mobility – on behalf of Ryka Consulting – Christine Contreras, 918 S. Horton St, Suite 1002, Seattle, WA 98134. The application was determined complete for processing on February 24, 2016. The decision on this application will be made within one-hundred twenty days of the determination of complete application.

Project Description Replace an existing 100 foot +/- high wireless communication tower with a new 101 foot tower. The facility is an existing Class 3 Use under SMC 10.02.050(C) but as a non-conforming structure (SMC 10.36.020) a variance is required for the tower to exceed the 35 foot height limitation of the R-1 zone. The new tower is to be located approximately 50 feet away from the existing tower location within the existing fenced area of the communication facility.

Location: On the summit of the ridge about 4,200 feet east of the east end of Lookout Point Drive in the City of Selah. (Yakima County Assessor Parcel Number: 181311-13004).

Environmental Review: The City of Selah, as the lead agency for this proposal under the State Environmental Policy Act (SEPA) has determined that the proposal is categorically exempt from SEPA under WAC 197-11-800(25).

Request for Written Comments on the Proposal Written comments concerning the proposed application will be accepted during the public comment period that ends at 5:00.p.m, on March 11, 2016. You may mail your comments to Selah Planning Department, 222 So. Rushmore Road, Selah, WA 98942, send them by fax at 1 (509) 698-7372 or by e-mail at tdurant@ci.selah.wa.us. Reference a file number stated in this notice or "New Cingular Wireless/AT&T Mobility" in your correspondence.

Open Record Public Hearing Notice is hereby given that on Tuesday, March 15, 2016 commencing at 5:30 P.M., or as soon thereafter as practical, the City of Selah Planning Commission will conduct an open record public hearing in the Council Chambers, Selah City Hall, 115 W. Naches Ave. Selah, WA on the Class 3 Use. All interested persons may appear and provide testimony on the application. SMC 21.09.030 and SMC 10.06.040 are pertinent to the hearing procedure. At the conclusion of the public hearing the Planning Commission will consider the matter and issue a recommendation to the City Council for approval, approval with conditions, or denial of the Variance application.

Application information including plans and maps detailing the proposal are available during regular business hours at the Planning Department at 222 South Rushmore Road, Selah, Washington 98942. The staff report will be available approximately one week before the hearing. Contact the Planning Department with project, procedural or environmental questions.

Dated this 26th day of February 2016.

/s/ Thomas R. Durant, Community Planner

(625300) February 26, 2016

EXHIBIT
tabbies
10

Courtesy of Yakima Herald-Republic

YAKIMA HERALD-REPUBLIC

Affidavit of Publication

STATE OF WASHINGTON,)
)
COUNTY OF YAKIMA)

Debbie Martin, being first duly sworn on oath deposes and says that she/he is the Accounting clerk of Yakima Herald-Republic, Inc., a daily newspaper. Said newspaper is a legal newspaper approved by the Superior Court of the State of Washington for Yakima County under an order made and entered on the 13th day of February, 1968, and it is now and has been for more than six months prior to the date of publication hereinafter referred to, published in the English language continually as a daily newspaper in Yakima, Yakima County, Washington. Said newspaper is now and has been during all of said time printed in an office maintained at the aforesaid place of publication of said newspaper.

That the annexed is a true copy of a:
NOTICE OF DEVELOPMENT APPLICATION OP

it was published in regular issues (and not in supplement form) of said newspaper once each day and for a period of 1 times, the first insertion being on 02/26/2016 and the last insertion being on 02/26/2016

Yakima Herald-Republic 02/26/16

and the such newspaper was regularly distributed to its subscribers during all of the said period. That the full amount of the fee charged for the foregoing publication is the sum of $244.20

Debbie Martin

Accounting Clerk

LISA M DRIPPS NOTARY My Comm. Expires 04/05/2017 PUBLIC STATE OF WASHINGTON

Sworn to before me this 26th day of February 2016

Lisa M. Dripps

Notary Public in and for the
State of Washington,
residing at Yakima

EXHIBIT
11

CITY OF SELAH
AFFIDAVIT OF MAILING

STATE OF WASHINGTON
COUNTY OF YAKIMA

I, Caprise Groo, being first duly sworn on oath dispose and says:

I am an employee of the City of Selah, 222 South Rushmore Road, Selah, Washington; that I did on the 26 day of Feb, 2016 caused to be mailed, 8 envelopes, containing a true and correct copy of a Notice of Variance Application File 915.95.16-01. Said envelopes mailed from Selah, WA. with the correct first class postage and addressed to the owners of property listed by the Yakima County Treasurer as being the legal owners of real property located within 600 feet of the proposal.

A listing of the interested parties to whom notice has been mailed is contained in file 915.95.16-01.

Caprise Groo

Caprise Groo

STATE OF WASHINGTON
COUNTY OF YAKIMA

On this day personally appeared before me Caprise Groo to me known to be the individual referenced herein and who caused to be mailed the Notice of Variance Application File 915.95.16-01.

Given under my hand and official seal this 26th day of February, 2016.

Cynthia L Graziano

Cynthia L Graziano

Notary Public in and for the State of Washington, residing at Yakima, WA. My term expires 7/14/18.

CYNTHIA L GRAZIANO
COMMISSION EXPIRES
NOTARY PUBLIC
07-14-18
STATE OF WASHINGTON

EXHIBIT
12

CITY OF SELAH

MAR 29 2016
CITY OF SELAH
PUBLIC WORKS

ADMINISTRATIVE ADJUSTMENT APPLICATION

Assigned File No. _____

APPLICATION REQUIREMENTS (print or type information)

Date Submitted/Received By: _____

☑ Non-Refundable Application Fee

☑ Site Plan (one copy, B&W, drawn to scale, max. size 11" x17")

THE APPLICATION AND REQUIRED SUBMITTALS MUST BE COMPLETED AND SUBMITTED BEFORE THE APPLICATION IS ACCEPTED AS COMPLETE BY THE CITY.

APPLICANT'S NAME: New Cingular Wireless PCS LLC (AT&T Mobility)
Contact: Jennifer Taylor with Ryka Consulting

APPLICANT'S ADDRESS: c/o Ryka Consulting
918 S Horton St #1002 Seattle, WA 98134

Signature

TELEPHONE: (work) 206-228-2127 (home) _____

NAME OF LEGAL PROPERTY OWNER: ELL TEL Wireless
(If different from applicant)

ADDRESS: _____

See lease previously submitted
Signature

TELEPHONE: (work) _____ (home) _____

Tax Parcel # 181311-13004 Legal description of property: _____

See Sheet A-1 of Site Plan

(attach if lengthly)

EXHIBIT 13

Zoning Classification: R-1 Comprehensive plan designation: Low Density Residential

NOTICE OF DEVELOPMENT APPLICATION (REVISED)
OPPORTUNITY TO PROVIDE COMMENTS
NOTICE OF CONTINUED PLANNING COMMISSION OPEN RECORD PUBLIC HEARING

File No. 915.95.16-01 – New Cingular Wireless PCS, LLC / AT&T Mobility / Ryka Consulting Notice of Application.

Application: On February 5, 2016 the City of Selah Planning Department received a Variance application for a communication tower in the One-Family Residential (R-1) zone from New Cingular Wireless PCS, LLC / AT&T Mobility – on behalf of Ryka Consulting – Christine Contreras, 918 S. Horton St, Suite 1002, Seattle, WA 98134. The application was determined complete for processing on February 24, 2016. The decision on this application will be made within one-hundred twenty days of the determination of complete application.

Application Revision: On March 29, 2016 the applicant revised the application to include a request for administrative adjustment of the 20-foot rear setback standard of the R-1 zone. The tower is proposed to be located 9 1/2 feet and 14 1/2 feet from the south and east property lines respectively.

Project Description Replace an existing 100 foot +/- high wireless communication tower with a new 101 foot tower. The facility is an existing Class 3 Use under SMC 10.02.050(C) but as a non-conforming structure (SMC 10.36.020) a variance is required for the tower to exceed the 35 foot height limitation of the R-1 zone. The new tower is to be located approximately 50 feet away from the existing tower location within the existing fenced area of the communication facility.

Location: On the summit of the ridge about 4,200 feet east of the east end of Lookout Point Drive in the City of Selah. (Yakima County Assessor Parcel Number: 181311-13004).

Environmental Review: The City of Selah, as the lead agency for this proposal under the State Environmental Policy Act (SEPA) has determined that the proposal is categorically exempt from SEPA under WAC 197-11-800(25).

Request for Written Comments on the Proposal Written comments concerning the proposed application will be accepted during the public comment period that ends at 5:00.p.m, on May 6, 2016. You may mail your comments to Selah Planning Department, 222 So. Rushmore Road, Selah, WA 98942, send them by fax at 1 (509) 698-7372 or by e-mail at hbedi@ci.selah.wa.us. Reference a file number stated in this notice or "New Cingular Wireless/AT&T Mobility" in your correspondence.

Open Record Public Hearing Notice is hereby given that on Tuesday, May 17, 2016 commencing at 5:30 P.M., or as soon thereafter as practical, the City of Selah Planning Commission will conduct an open record public hearing in the Council Chambers, Selah City Hall, 115 W. Naches Ave. Selah, WA on the proposed variance and administrative adjustment. All interested persons may appear and provide testimony on the application. SMC 21.09.030 is pertinent to the hearing procedure. At the conclusion of the public hearing the Planning Commission will consider the matter and issue a decision for approval, approval with conditions, or denial of the variance and administrative adjustment applications.

Application information including plans and maps detailing the proposal are available during regular business hours at the Planning Department at 222 South Rushmore Road, Selah, Washington 98942. The staff report will be available approximately one week before the hearing. Contact the Planning Department with project, procedural or environmental questions.

Dated this 11th day of April 2016.

/s/ Harmit Bedi, City Planner

(636987) April 11, 2016

EXHIBIT
14

Courtesy of Yakima Herald-Republic

CITY OF SELAH
AFFIDAVIT OF MAILING

STATE OF WASHINGTON
COUNTY OF YAKIMA

I, Caprise Groo, being first duly sworn on oath dispose and says:

I am an employee of the City of Selah, 222 South Rushmore Road, Selah, Washington; that I did on the 11th day of April, 2016 caused to be mailed, 8 envelopes, containing a true and correct copy of a Notice of Variance Application File 915.95.16-01. Said envelopes mailed from Selah, WA. with the correct first class postage and addressed to the owners of property listed by the Yakima County Treasurer as being the legal owners of real property located within 600 feet of the proposal.

A listing of the interested parties to whom notice has been mailed is contained in file 915.95.16-01.

Caprise Groo

Caprise Groo

STATE OF WASHINGTON
COUNTY OF YAKIMA

On this day personally appeared before me Caprise Groo to me known to be the individual referenced herein and who caused to be mailed the Notice of Variance Application File 915.95.16-01.

Given under my hand and official seal this 11th day of April, 2016.

Cynthia L. Graziano

Cynthia L Graziano

Notary Public in and for the State of Washington, residing at Yakima, WA. My term expires 7/14/18.

CYNTHIA L GRAZIANO
COMMISSION EXPIRES
NOTARY PUBLIC
07-14-18
STATE OF WASHINGTON

EXHIBIT
15

May 19, 2016

Jennifer Taylor

RYKA Consulting

918 South Horton Street

Suite 1002

Seattle, Washington 98134

RE: Approval Letter

File Number: 915.95.16-01

City of Selah, Washington, 98942

Dear Ms. Taylor:

This is to advise you that the City of Selah Planning Commission during the regular meeting on May 17, 2016, consider the request for a Variance and an Administrative Adjustment (File Number: 915.95.16-01). The unanimous decision was to **Approve** the requested Variance and Administrative Adjustment with the following conditions:

1. Height limitation of 101 feet as shown by the application and substantial conformance to the site plan and elevations submitted with the application except as modified by this decision.

2. Consistent with the zoning ordinance requirements for camouflaging the tower, the tower shall not be painted red, white, or any other bright color but shall be painted gray, green or other darker color that blends with the surroundings. No lights shall be installed on the tower unless the administrative official is provided with written documentation from the FAA, FCC or a State agency with jurisdiction over aviation that states specifically that such lighting is required on this tower. The applicant may provide

documented proof from FAA/FCC to comply with their regulations regarding the paint selection.

3. Making the tower available for co-location of telecommunication facilities consistent with SMC 10.28.040(h)(3) is authorized and encouraged and the City shall not require additional zoning review for the addition of such facilities provided that they do not increase the height of the tower at the time of their installation.

4. Tower width shall not be increased beyond that shown in the site plan and elevations submitted with the application in order to reduce visual impact as required by the zoning ordinance.

5. Security lighting fixtures shall be shielded, directed or located to not shine on neighboring properties or to be visible from a distance.

6. New equipment buildings or other ground level appurtenances may be installed subject to compliance with the building code and subject to the following conditions:

    a. Conformance to zoning setbacks for accessory buildings.

    b. Painted or siding installed that is gray, green or other darker color that blends with the surroundings.

    c. They shall be located in the existing fenced area on the site as shown by the site plan.

7. Submittal of a pre-construction drainage plan and sediment control plan prior to building permit issuance. Special inspections for concrete and rebar will be required.

8. Soils disturbed during the project shall be revegetated using native plant species to reduce the spread of noxious invasive weeds.

9. Project shall be completed within one year of the final decision approving the variance. Completion includes the removal of the existing tower, which may occur after construction of the new tower has begun. Extensions may be requested as authorized by the zoning ordinance, but must be requested in writing prior to the completion date.

10. The applicant shall submit "as-built" plans showing setbacks from the existing property lines, prior to obtaining Certificate of Occupancy. Those set back will be closest possible to the submitted site plans for variance and administrative adjustment. Those set back shall be the final setbacks and shall be considered as approved set back by the Planning Commission.

11. All approved conditions must be recorded on the plans submitted for approval by the City.

If you have any questions please contact me by calling 509-698-7365.

Thank you,

Sincerely,

Harmit Bedi, AICP

cc; Project File
Address File